1.机壳部件（1）

Frame & Miscelilaneous cover components

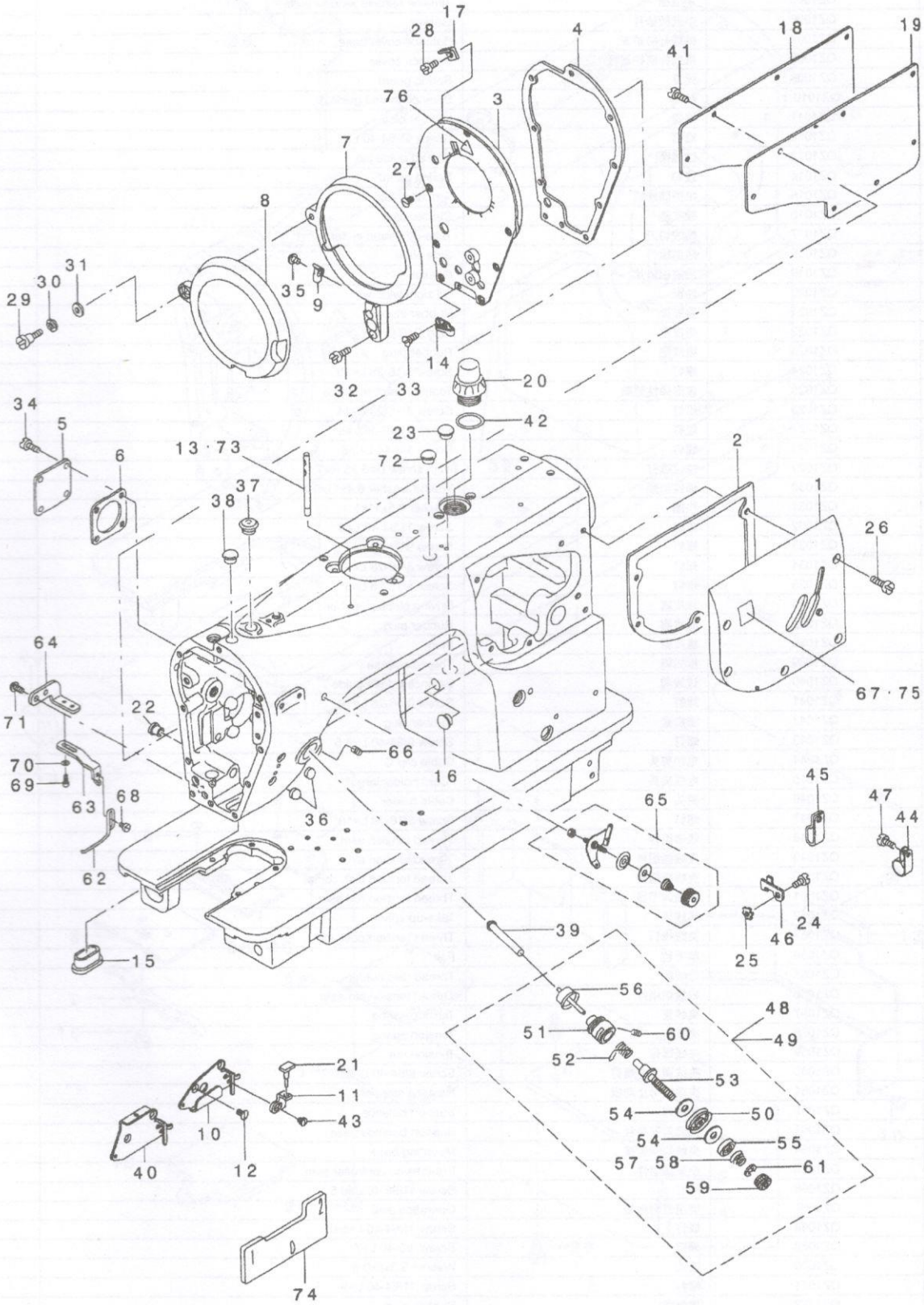

序号	零件代号	名 称	DESCRIPTIPN	数 量
1	QZ1001	右侧盖板组件	Arm side cover compl.	1
2	QZ1002	右侧盖板垫片	Gasket	1
3	QZ1003	面板组件	Face plate compl.	1
4	QZ1004	面板垫片	Gasket	1
5	QZ1005	小蓝板	Tension release window plate	1
6	QZ1006	小盖板垫片	Gasket	1
7	QZ1007	挑线杆防护罩	Balance cover base	1
8	QZ1008	挑线杆防护罩板	Balance cover	1
9	QZ1009	弹簧	Spring guard	1
10	QZ1010	线勾	Balance thread guide A	1
11	QZ1011	线勾	Rubber plug	1
12	QZ1012	螺钉	Screw 11/64-40 L=8	2
13	QZ1013	过线销	Thread guide pin	1
14	QZ1014	线勾	Spring guard	1
15	QZ1015	机壳防油板	Arm oil shield	1
16	QZ1016	橡皮塞	Rubber plug	1
17	QZ1017	挑线切刀	Take-up thread cutter	1
18	QZ1018	后盖板	Side plate	1
19	QZ1019	后盖板垫片	Gasket	1
20	QZ1020	油窗	Oil sight window	1
21	QZ1021	橡胶垫	Rubber stopper	1
22	QZ1022	橡皮塞	Plug D=8 L=4.5	1
23	QZ1023	橡皮塞	Rubber plug	2
24	QZ1024	螺钉	Screw 3/16-28 L=10	1
25	QZ1025	波形弹性垫圈	Toothed washer D=5.3	1
26	QZ1026	螺钉	Screw 3/16-28 L=14	5
27	QZ1027	螺钉	Screw 11/16-40 L=8	7
28	QZ1028	螺钉	Screw 1/8-44 L=3.8	1
29	QZ1029	轴位螺钉	High screw D=6.35 H=7.5	1
30	QZ1030	弹性垫圈	Waved washer 6.4x11x0.3	1
31	QZ1031	垫圈	Washer 6.5x11x1	1
32	QZ1032	螺钉	Screw 11/64-40 L=9	2
33	QZ1033	螺钉	Screw 9/64-40 L=7	1
34	QZ1034	螺钉	Screw 3/16-28 L=6	4
35	QZ1035	螺钉	Screw 3/16-28 L=6	1
36	QZ1036	橡皮塞	Driving stopper rubber	2
37	QZ1037	橡皮塞	Rubber plug	1
38	QZ1038	橡皮塞	Plug	1
39	QZ1039	松线销	Thread release	1
40	QZ1040	过线勾	Balance thread guide T	1
41	QZ1041	螺钉	Screw 3/46-28 L=10	8
42	QZ1042	橡皮塞	Rubber plug	1
43	QZ1043	螺钉	Screw 9/64-40 L=3.5	1
44	QZ1044	电线夹头	Cable clip C	1
45	QZ1045	电线夹头	"Cord holder,large"	2
46	QZ1046	夹头	Cable holder	1
47	QZ1047	螺钉	Screw 3/16-28 L=10	1
48	QZ1048	线器组件	Thread tension asm.	1
49	QZ1049	夹线器组件	Thread tension asm.	1
50	QZ1050	夹线板组件	Thread tension disk compl.	(1)
51	QZ1051	夹线调节座	Thread tension rod asm.	(1)
52	QZ1052	挑线簧	Take-up spring	(1)
53	QZ1053	夹线螺钉	Thread tension post asm.	(1)
54	QZ1054	羊毛毡	Felt	(2)
55	QZ1055	松线板	Thread disc holder	(1)
56	QZ1056	松线销组件	Thread tension pin asm.	(1)
57	QZ1057	夹线簧	Tension spring	(1)
58	QZ1058	夹线簧	Tension spring	(1)
59	QZ1059	夹线螺母	Tension nut	(1)
60	QZ1060	夹线调节座螺钉	Screw 9/64-40 L=5.5	(1)
61	QZ1061	夹线螺母止动板	Rotating stopper	(1)
62	QZ1062	夹线勾	Support balance	1
63	QZ1063	夹线勾安装台	Support balance base	1
64	QZ1064	夹线勾安装座	Mounting base	1
65	QZ1065	小夹线组件	Pre-tension controller asm.	1
66	QZ1066	螺钉	Screw 11/64-40 L=6.5	1
67	QZ1067	使用说明标签	Operation seal	1
68	QZ1068	螺钉	Screw 11/64-40 L=5.0	1
69	QZ1069	螺钉	Screw 1/8-40 L=7	2
70	QZ1070	垫圈	Washer 3.3x6x0.5	2
71	QZ1071	螺钉	Screw 11/64-40 L=9	2
72	QZ1072	橡皮塞	Rubber plug	1
73	QZ1073	过线销	Thread guide bar	1
74	QZ1074	定位块	Timming gaug D	1
75	QZ1075	使用说明标签	Operation seal	1
76	QZ1076	注意事项标签	Attention seal	1

2.机壳部件（2）

Frame & Miscelilaneous cover components(2)

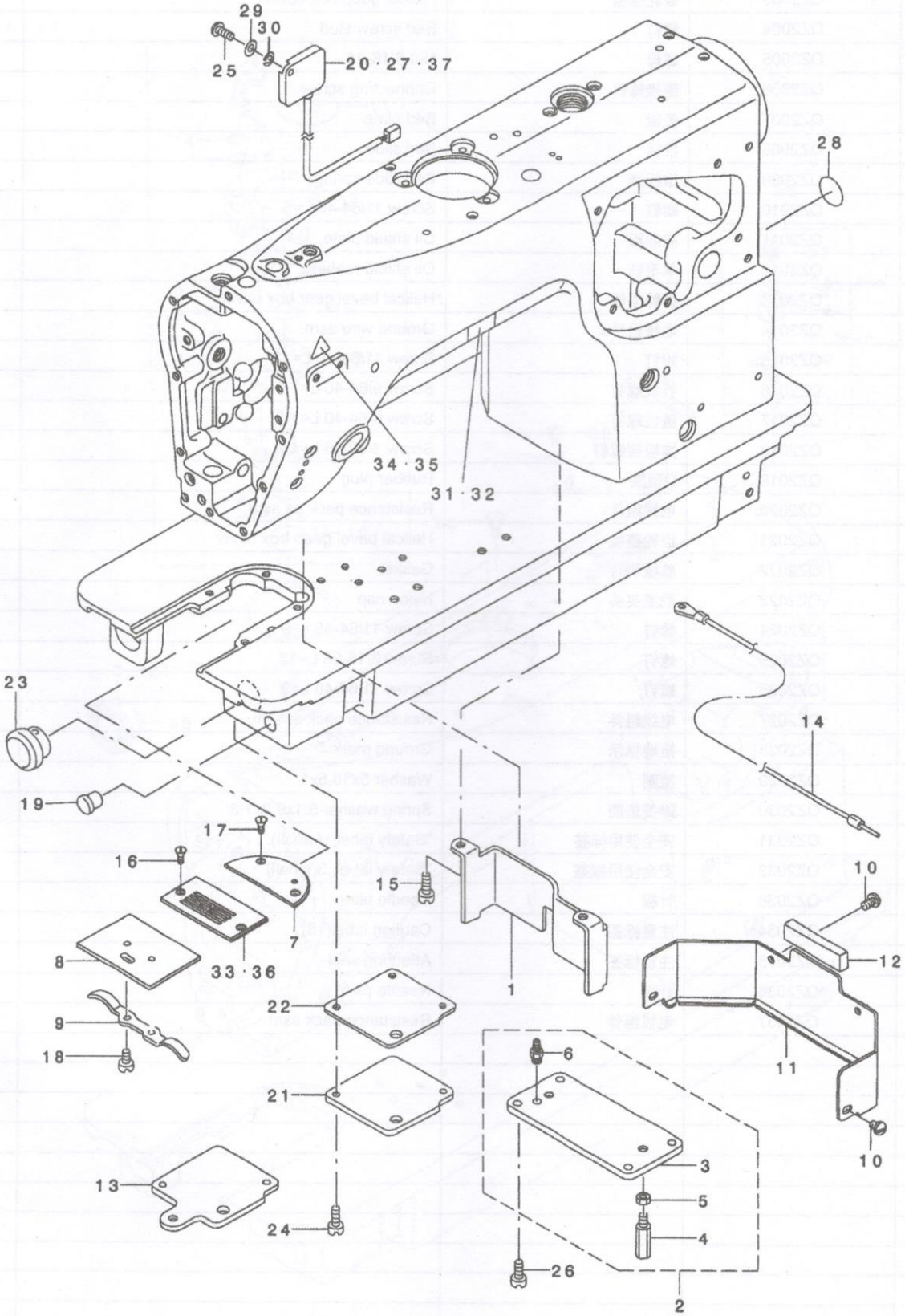

序号	零件代号	名 称	DESCRIPTIPN	数 量
1	QZ2001	支撑板	Support plate	1
2	QZ2002	齿轮盖板组件	Helical geap box cover asm.	1
3	QZ2003	齿轮盖板	Helical geap box cover	(1)
4	QZ2004	螺钉	Bed screw stud	(2)
5	QZ2005	螺母	Nut 5/16-24	(2)
6	QZ2006	连接螺钉	Connecting screw	(1)
7	QZ2007	盖板	Bed plate	1
8	QZ2008	推板	Bed slide	1
9	QZ2009	推板簧	Bed slide spring	1
10	QZ2010	螺钉	Screw 11/64-40 L=5	2
11	QZ2011	防油板	Oil shield plate	1
12	QZ2012	羊毛毡	Oil shield rubber	1
13	QZ2013	齿轮盖板	Helical bevel gear box cover	1
14	QZ2014	地线组件	Ground wire asm.	1
15	QZ2015	螺钉	Screw 11/64-40 L=12	2
16	QZ2016	针板螺钉	Screw 9/64-40 L=7.5	2
17	QZ2017	盖板螺钉	Screw 9/64-40 L=7.5	2
18	QZ2018	推板簧螺钉	Screw 3/32-56 L=1.9	2
19	QZ2019	O型圈	Rubber plug	1
20	QZ2020	电线组件	Resistance pack as asm.	1
21	QZ2021	齿轮盖板	Helical bevel geap box cover	1
22	QZ2022	盖板垫片	Gasket	1
23	QZ2023	尼龙夹头	Nylon cap	1
24	QZ2024	螺钉	Screw 11/64-40 L=9	3
25	QZ2025	螺钉	Screw 3/16-28 L=12	1
26	QZ2026	螺钉	Screw 11/64-40 L=9	4
27	QZ2027	电线组件	Resistance pack al asm.	1
28	QZ2028	接地标示	Ground mark	1
29	QZ2029	垫圈	Washer 5x10.5x1	1
30	QZ2030	弹簧垫圈	Spring washer 5.1x9.2x1.3	1
31	QZ2031	安全使用标签	"Safety label,1(small)."	1
32	QZ2032	安全使用标签	"Safety label.,3(small)."	1
33	QZ2033	针板	Needle plate	1
34	QZ2034	注意标签	Caution label(16)	1
35	QZ2035	注意标签	Attention seal	1
36	QZ2036	针板	Needle plate	1
37	QZ2037	电线组件	Resistance pack asm.	1

3.机壳部件（3）

Frame & Miscelilaneous cover components(3)

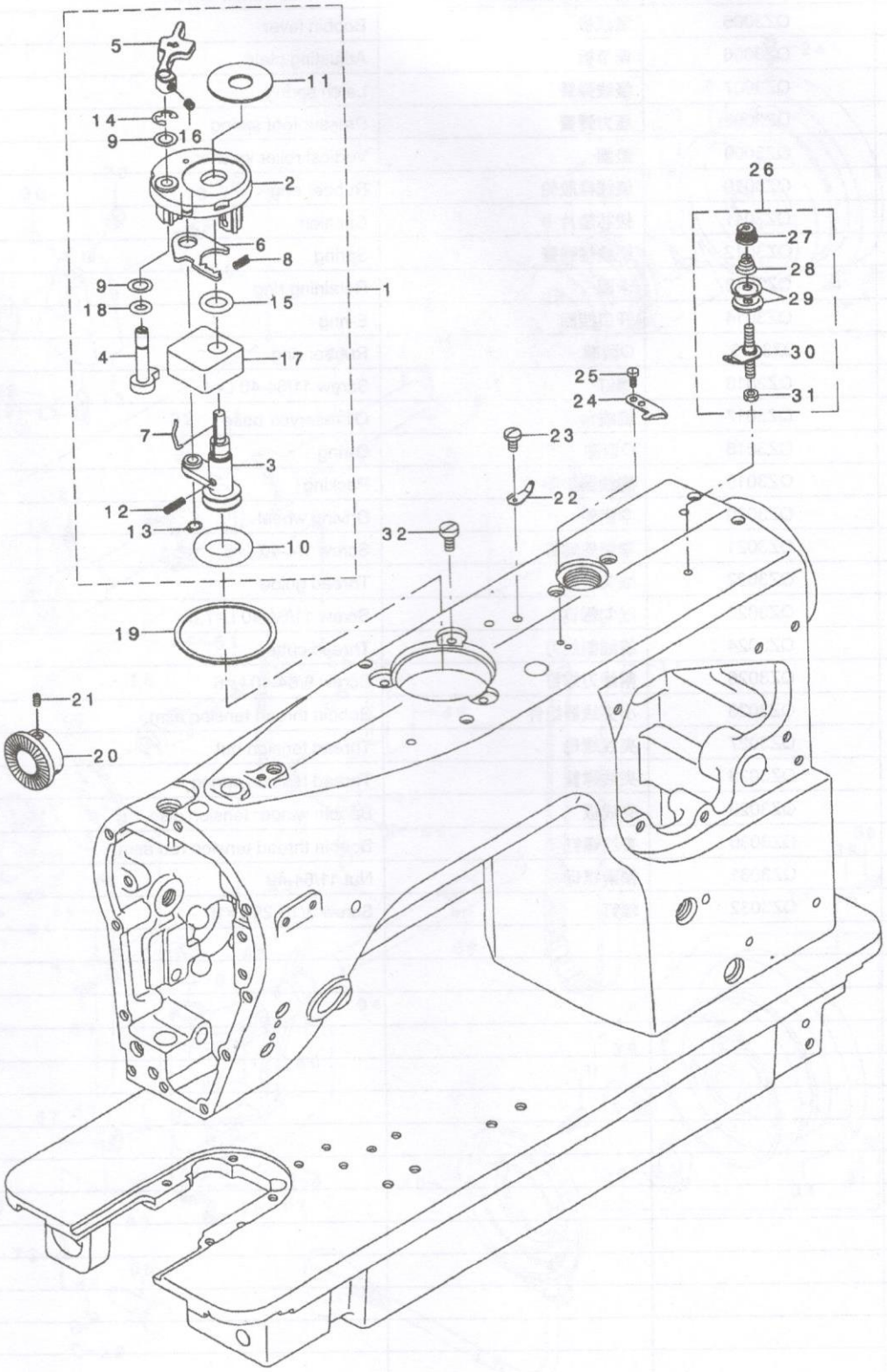

序号	零件代号	名 称	DESCRIPTIPN	数 量
1	QZ3001	绕线器组件	Bobbin device asm.	1
2	QZ3002	绕线座	Bobbin fitting basis compl.	(1)
3	QZ3003	绕线轴组件	Bobbin shaft compl.	(1)
4	QZ3004	绕线凸轮轴组件	Bobbin cam shaft compl.	(1)
5	QZ3005	满线板	Bobbin lever	(1)
6	QZ3006	调节板	Adjusting plate	(1)
7	QZ3007	绕线弹簧	Latch spring	(1)
8	QZ3008	压力弹簧	Pressur foot spring	(1)
9	QZ3009	垫圈	Vertical roller washer	(2)
10	QZ3010	绕线橡胶轮	Rubber ring	(1)
11	QZ3011	梭芯垫片	Cushion	(1)
12	QZ3012	绕线轴弹簧	Spring	(1)
13	QZ3013	卡圈	Retaining ring	(1)
14	QZ3014	开口挡圈	E-ring	(1)
15	QZ3015	O型圈	Rubber ring	(1)
16	QZ3016	螺钉	Screw 11/64-40 L=4	(1)
17	QZ3017	绕线台	Oil reservoir base	(1)
18	QZ3018	O型圈	O-ring	(1)
19	QZ3019	绕线器垫圈	Packing	1
20	QZ3020	伞齿轮	Driving wheel	1
21	QZ3021	伞齿轮螺钉	Screw 1/4-40 L=6	2
22	QZ3022	线勾	Thread guide	1
23	QZ3023	线勾螺钉	Screw 11/64-40 L=7.8	1
24	QZ3024	绕线割线刀	Thread cutter	1
25	QZ3025	割线刀螺钉	Screw 9/64-40 L=6	2
26	QZ3026	小夹线器组件	Bobbin thread tension asm.	1
27	QZ3027	夹线螺母	Thread tension nut	(1)
28	QZ3028	夹线弹簧	Thread tension spring	(1)
29	QZ3029	夹线板	Bobbin winder tension disc	(2)
30	QZ3030	夹线螺钉	Bobbin thread tension rod asm.	(1)
31	QZ3031	锁紧螺母	Nut 11/64-40	(1)
32	QZ3032	螺钉	Screw 3/16-28 L=10	3

4.上轴部件

Main shaft.needle bar component

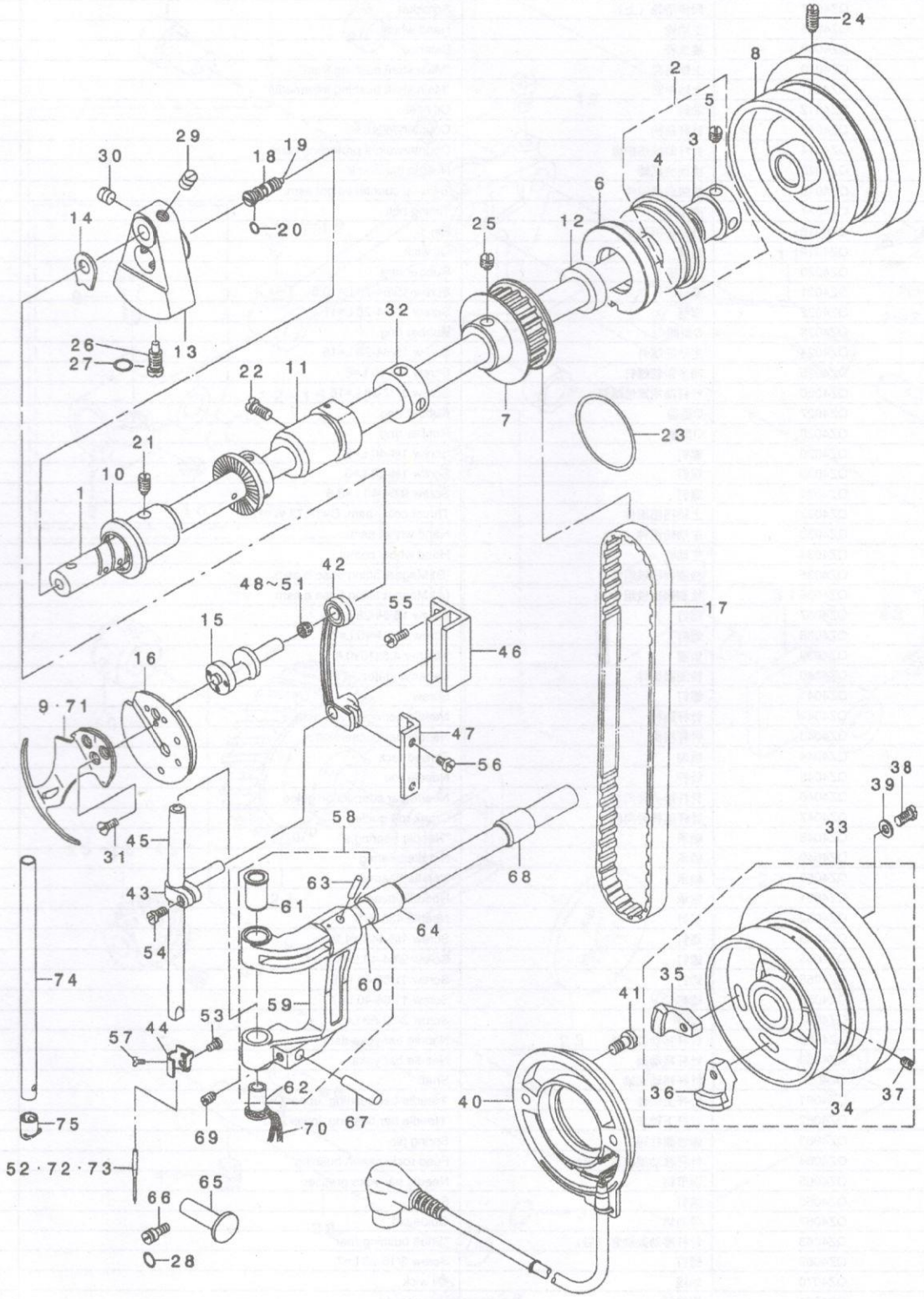

序号	零件代号	名 称	DESCRIPTIPN	数 量
1	LJQZ4001	上轴	Main shaft	1
2	QZ4002	轴承衬套组件	Thrust collar asm.	1
3	QZ4003	轴承衬套	Thrust collar asm.	(1)
4	QZ4004	轴承	Bearing D=20X47	(1)
5	QZ4005	螺钉	Screw 1/4-40 L=6	(2)
6	QZ4006	油封挡圈	Oil seal collar	1
7	QZ4007	同步带轮（上）	Sprocket	1
8	QZ4008	主动轮	Hand wheel	1
9	QZ4009	挑线杆	Balance	1
10	QZ4010	上轴前套	"Main shaft bushing,front"	1
11	QZ4011	上轴中套	"Main shaft bushing,intermedia"	1
12	QZ4012	油封	Oil seal	1
13	QZ4013	针杆曲柄	Counterweight	1
14	QZ4014	针杆曲柄防护板	Counterweight protecting plate	1
15	QZ4015	挑线曲柄轴	Needle bar crank	1
16	QZ4016	挑线曲柄组件	Take-up counterweight asm.	1
17	QZ4017	同步带	Timing belt	1
18	QZ4018	针杆曲柄销	Pin	1
19	QZ4019	油线	Oil wick	1
20	QZ4020	O型圈	Rubber ring	1
21	QZ4021	螺钉	Screw 15/64-28 L=10.5	1
22	QZ4022	螺钉	Screw 15/64-28 L=11	1
23	QZ4023	O型圈	Rubber ring	1
24	QZ4024	主动轮螺钉	Screw 15/64-28 L=15	2
25	QZ4025	同步带轮螺钉	Screw 1/4-40 L=6	2
26	QZ4026	针杆曲柄定位螺钉	Screw 9/32-28 L=16	1
27	QZ4027	O型圈	Rubber ring	1
28	QZ4028	O型圈	Rubber ring	1
29	QZ4029	螺钉	Screw 1/4-40 L=6	2
30	QZ4030	螺钉	Screw 1/4-40 L=6	2
31	QZ4031	螺钉	Screw 9/64-40 L=8.6	3
32	QZ4032	上轴挡圈组件	Thrust collar asm. D=14.72 W=12	1
33	QZ4033	主动轮组件	Hand wheel asm.	1
34	QZ4034	主动轮	Hand wheel compl.	(1)
35	QZ4035	检测器磁铁组件	(B) Magnet fitting base b asm.	(1)
36	QZ4036	检测器磁铁组件	(A) Magnet fitting base a asm.	(1)
37	QZ4037	螺钉	Screw 15/64-28 L=15	(2)
38	QZ4038	螺钉	Screw 11/64-40 L=12	2
39	QZ4039	垫圈	Washer 4.5x10x0.8	2
40	QZ4040	检测器组件	Dynamo stator	1
41	QZ4041	螺钉	Screw	2
42	QZ4042	针杆连杆	Needle bar crank rod asm.	1
43	QZ4043	针杆接头	Needle bar connection	1
44	QZ4044	线勾	Thread rack	1
45	QZ4045	针杆	Needle rod	1
46	QZ4046	针杆接头导向块	Neede bar connection guide	1
47	QZ4047	针杆连杆导向块	Crank rod guide	1
48	QZ4048	轴承	"Needle bearing,a"	1
49	QZ4049	轴承	Needle bearing	1
50	QZ4050	轴承	Needle bearing	1
51	QZ4051	轴承	Needdle bearing	1
52	QZ4052	机针	Needle 438 #75	1
53	QZ4053	螺钉	Screw 1/8-44 L=4.9	1
54	QZ4054	螺钉	Screw 9/64-40 L=8.5	1
55	QZ4055	螺钉	Screw 11/64-40 L=9	2
56	QZ4056	螺钉	Screw 11/64-40 L=7	2
57	QZ4057	螺钉	Screw 3/32-56 L=3	1
58	QZ4058	针杆移动架组件	Needle bar yoke asm.	1
59	QZ4059	针杆移动架	Needle bar yoke	(1)
60	QZ4060	针杆移动架轴	Shaft	(1)
61	QZ4061	针杆上轴套	"Needle bar bushing ,upper D=7"	(1)
62	QZ4062	针杆下轴套	"Needle bar bushing ,lower D=7"	(1)
63	QZ4063	弹性圆柱销	Spring pin	(1)
64	QZ4064	针杆移动架轴套（前）	Feed rocker shaft bushing	1
65	QZ4065	调节销	Needle bar yoke presser	1
66	QZ4066	螺钉	Screw	1
67	QZ4067	导向销	Guide pin	1
68	QZ4068	针杆移动架轴套（后）	"Shaft bushing,rear"	1
69	QZ4069	螺钉	Screw 3/16-28 L=7	1
70	QZ4070	油线	Oil wick	0.1
71	QZ4071	挑线杆	Balance V	1
72	QZ4072	机针	Needle 134suk 70	1
73	QZ4073	机针	Needle DPX5 #10	1
74	QZ4074	针杆	Needle rod	1
75	QZ4075	针杆过线环	Needle rod thread rack	1

5.针杆调节部件（1）
Needle vibrator & Adjustment components(1)

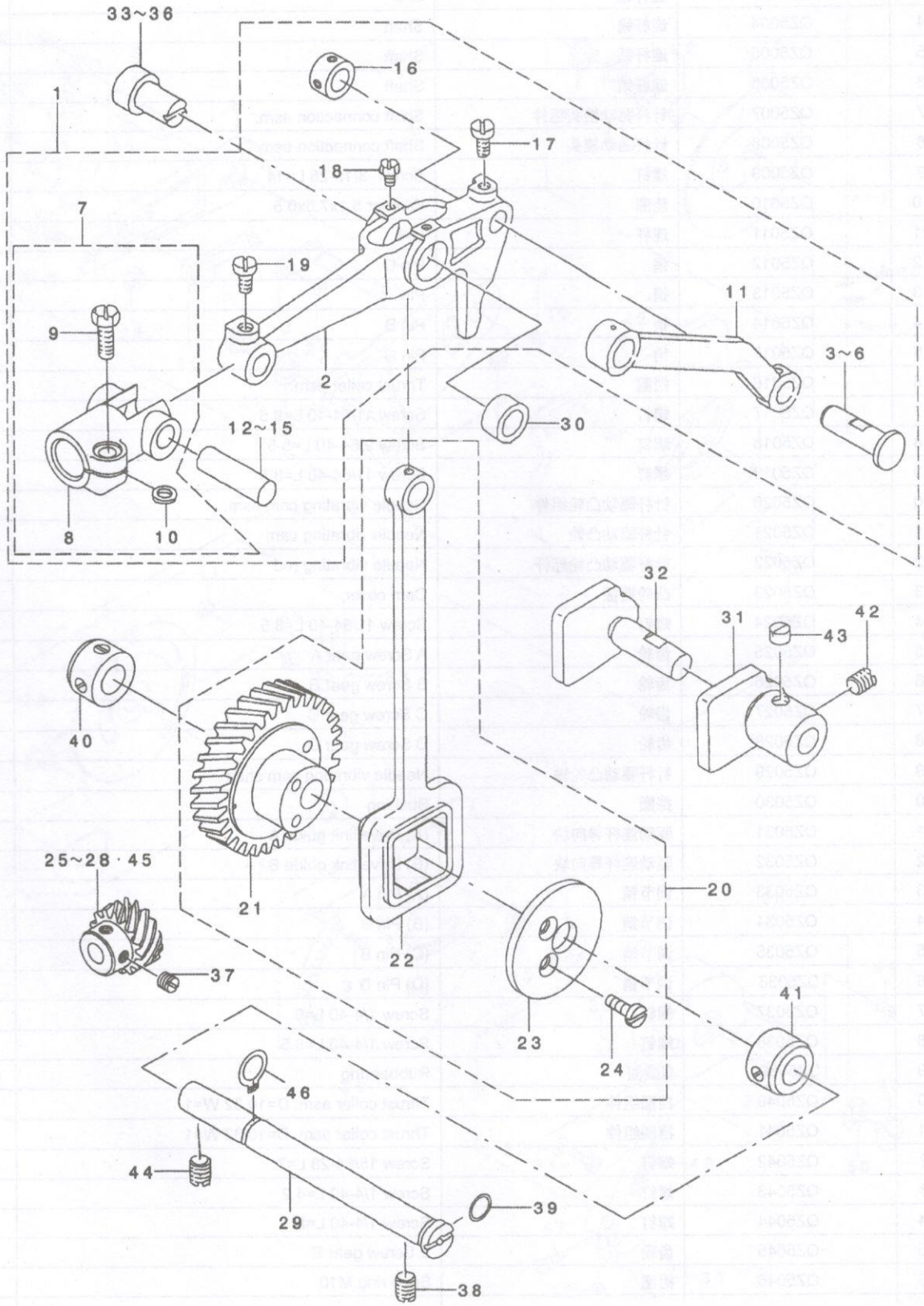

序号	零件代号	名 称	DESCRIPTIPN	数 量
1	QZ5001	针杆调节大组件	Drive link asm.	1
2	QZ5002	针杆驱动连杆	Drive link	(1)
3	QZ5003	连杆销	Link	(1)
4	QZ5004	连杆销	Shaft	(1)
5	QZ5005	连杆销	Shaft	(1)
6	QZ5006	连杆销	Shaft	(1)
7	QZ5007	针杆驱动接头组件	Shaft connection asm.	(1)
8	QZ5008	针杆驱动接头	Shaft connection asm.	(1)
9	QZ5009	螺钉	Screw 3/16-28 L=14	(1)
10	QZ5010	垫圈	Washer 5.1x7.5x0.5	(1)
11	QZ5011	连杆	Link	(1)
12	QZ5012	销	Pin D	(1)
13	QZ5013	销	Pin	(1)
14	QZ5014	销	Pin B	(1)
15	QZ5015	销	Pin C	(1)
16	QZ5016	挡圈	Thrust collar asm.	(1)
17	QZ5017	螺钉	Screw 11/64-40 L=8.5	(1)
18	QZ5018	螺钉	Screw 9/64-40 L=5.5	(2)
19	QZ5019	螺钉	Screw 11/64-40 L=8.5	(1)
20	QZ5020	针杆驱动凸轮组件	Needle vibrating cam asm.	1
21	QZ5021	针杆驱动凸轮	Needle vibrating cam	(1)
22	QZ5022	针杆驱动凸轮连杆	Needle vibrating rod	(1)
23	QZ5023	凸轮挡板	Cam cover	(1)
24	QZ5024	螺钉	Screw 11/64-40 L=8.5	(2)
25	QZ5025	齿轮	A Screw gear A	1
26	QZ5026	齿轮	B Screw gear B	1
27	QZ5027	齿轮	C Screw gear C	1
28	QZ5028	齿轮	D Screw gear D	1
29	QZ5029	针杆驱动凸轮轴	Needle vibrating cam shaft	1
30	QZ5030	挡圈	Bushing	1
31	QZ5031	驱动连杆导向块	(A) Drive link guide A	1
32	QZ5032	驱动连杆导向块	(B) Drive link guide B	1
33	QZ5033	调节销	(A) Pin A	1
34	QZ5034	调节销	(B) Pin B	1
35	QZ5035	调节销	(C) Pin B	1
36	QZ5036	调节销	(D) Pin D	1
37	QZ5037	螺钉	Screw 1/4-40 L=6	2
38	QZ5038	螺钉	Screw 1/4-40 L=8.5	1
39	QZ5039	O型圈	Rubber ring	1
40	QZ5040	挡圈组件	Thrust collar asm. D=10.32 W=1	1
41	QZ5041	挡圈组件	Thrust collar asm. D=10.32 W=1	1
42	QZ5042	螺钉	Screw 15/64-28 L=7	1
43	QZ5043	螺钉	Screw 1/4-40 L=4.2	1
44	QZ5044	螺钉	Screw 1/4-40 L=8	1
45	QZ5045	齿轮	E Screw gear E	1
46	QZ5046	挡圈	Snap ring M10	1

6.针杆调节部件（2）

Needle vibrator & Adjustment components(2)

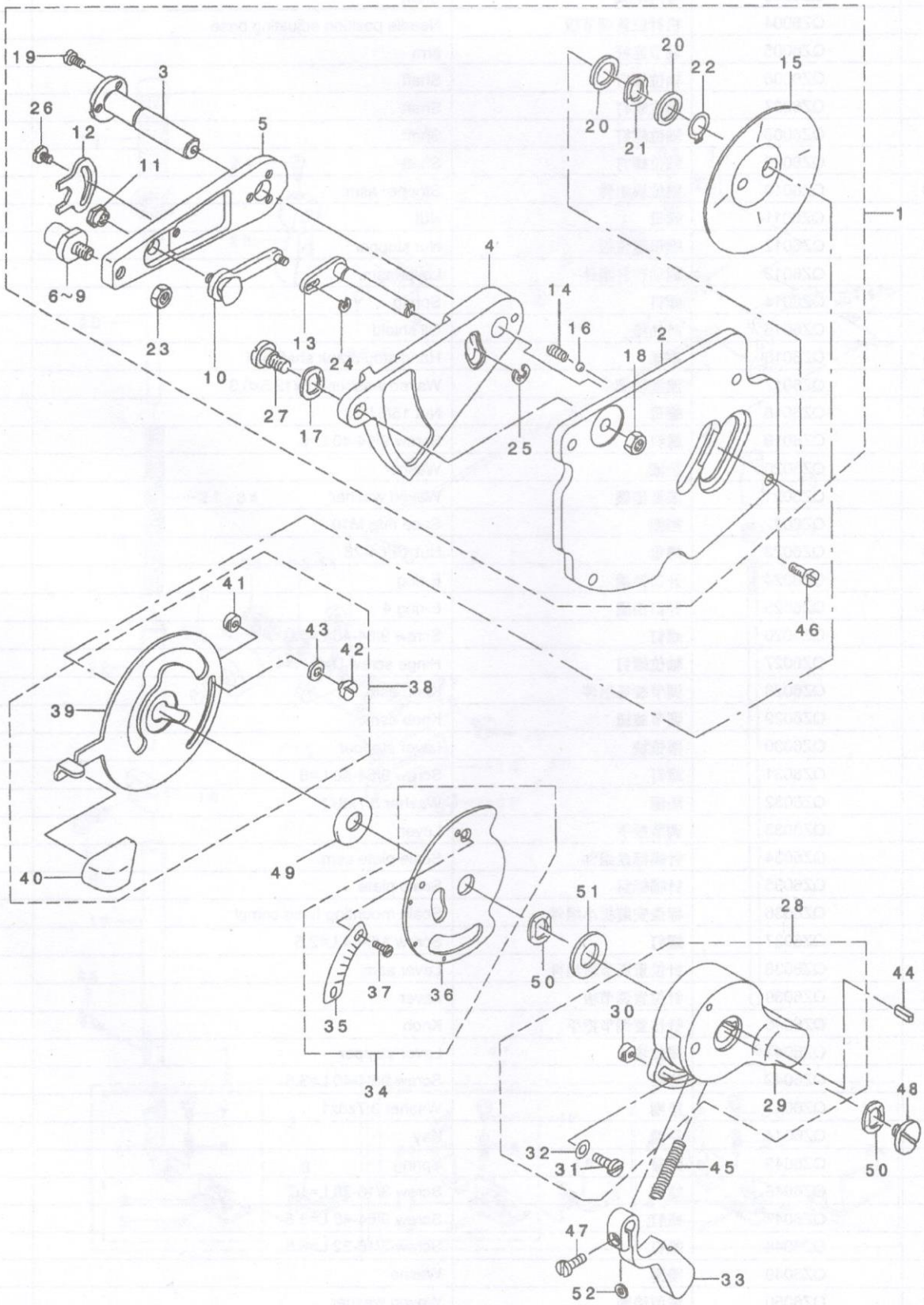

序号	零件代号	名 称	DESCRIPTIPN	数 量
1	QZ6001	针幅标盘组件	Base asm.	1
2	QZ6002	标盘安装板	Base mounting plate	(1)
3	QZ6003	导向小轴	Shaft	(1)
4	QZ6004	机针位置调节板	Needle position adjusting base	(1)
5	QZ6005	调节连杆	arm	(1)
6	QZ6006	轴位螺钉	Shaft	(1)
7	QZ6007	轴位螺钉	Shaft	(1)
8	QZ6008	轴位螺钉	Shaft	(1)
9	QZ6009	轴位螺钉	Shaft	(1)
10	QZ6010	限位块组件	Stopper asm.	(1)
11	QZ6011	螺母	Nut	(1)
12	QZ6012	螺母限位板	Nut stopper	(1)
13	QZ6013	驱动连杆组件	Lever asm.	(1)
14	QZ6014	螺钉	Spring	(1)
15	QZ6015	防油垫	Oil shield	(1)
16	QZ6016	钢球	Hand stop crank shaft ball	(1)
17	QZ6017	波型垫圈	Waved washer 8.5x12.5x0.3	(3)
18	QZ6018	螺母	Nut 15/64-28	(1)
19	QZ6019	螺钉	Screw 9/64-40 L=6	(3)
20	QZ6020	垫圈	Washer	(2)
21	QZ6021	波型垫圈	Waved washer	(1)
22	QZ6022	挡圈	Snap ring M10	(1)
23	QZ6023	螺母	Nut 15/64-28	(1)
24	QZ6024	开口挡圈	E-ring	(1)
25	QZ6025	开口挡圈	E-ring 4	(1)
26	QZ6026	螺钉	Screw 9/64-40 L=5.0	(1)
27	QZ6027	轴位螺钉	Hinge screw D=8 H=4	(1)
28	QZ6028	调节旋钮组件	Knob asm.	1
29	QZ6029	调节旋钮	Knob asm.	(1)
30	QZ6030	限位块	Lever stopper	(2)
31	QZ6031	螺钉	Screw 9/64-40 L=6	(2)
32	QZ6032	垫圈	Washer 3.7x8x1	(2)
33	QZ6033	调节扳手	Lever	1
34	QZ6034	针幅标盘组件	Scale plate asm.	(1)
35	QZ6035	针幅标盘	Scale plate	(1)
36	QZ6036	标盘安装板小组件	Scale mounting base compl	(1)
37	QZ6037	螺钉	Screw 1/8-44 L=2.5	(2)
38	QZ6038	针位置调节板组件	Lever asm.	1
39	QZ6039	针位置调节板	Lever	(1)
40	QZ6040	针位置调节把手	Knob	(1)
41	QZ6041	限位块	Lever stopper	(2)
42	QZ6042	螺钉	Screw 9/64-40 L=3.5	(2)
43	QZ6043	垫圈	Washer 3.7x8x1	(2)
44	QZ6044	平键	Key	1
45	QZ6045	弹簧	Spring	1
46	QZ6046	螺钉	Screw 3/16-28 L=10	4
47	QZ6047	螺钉	Screw 9/64-40 L=8.5	1
48	QZ6048	螺钉	Screw 3/16-32 L=6.5	1
49	QZ6049	垫圈	Washer	1
50	QZ6050	波型垫圈	Waved washer	1
51	QZ6051	垫圈	Washer	1
52	QZ6052	垫圈	Washer 3.7x6x1	1

7.压脚部件

Presser bar & Feed regulator components

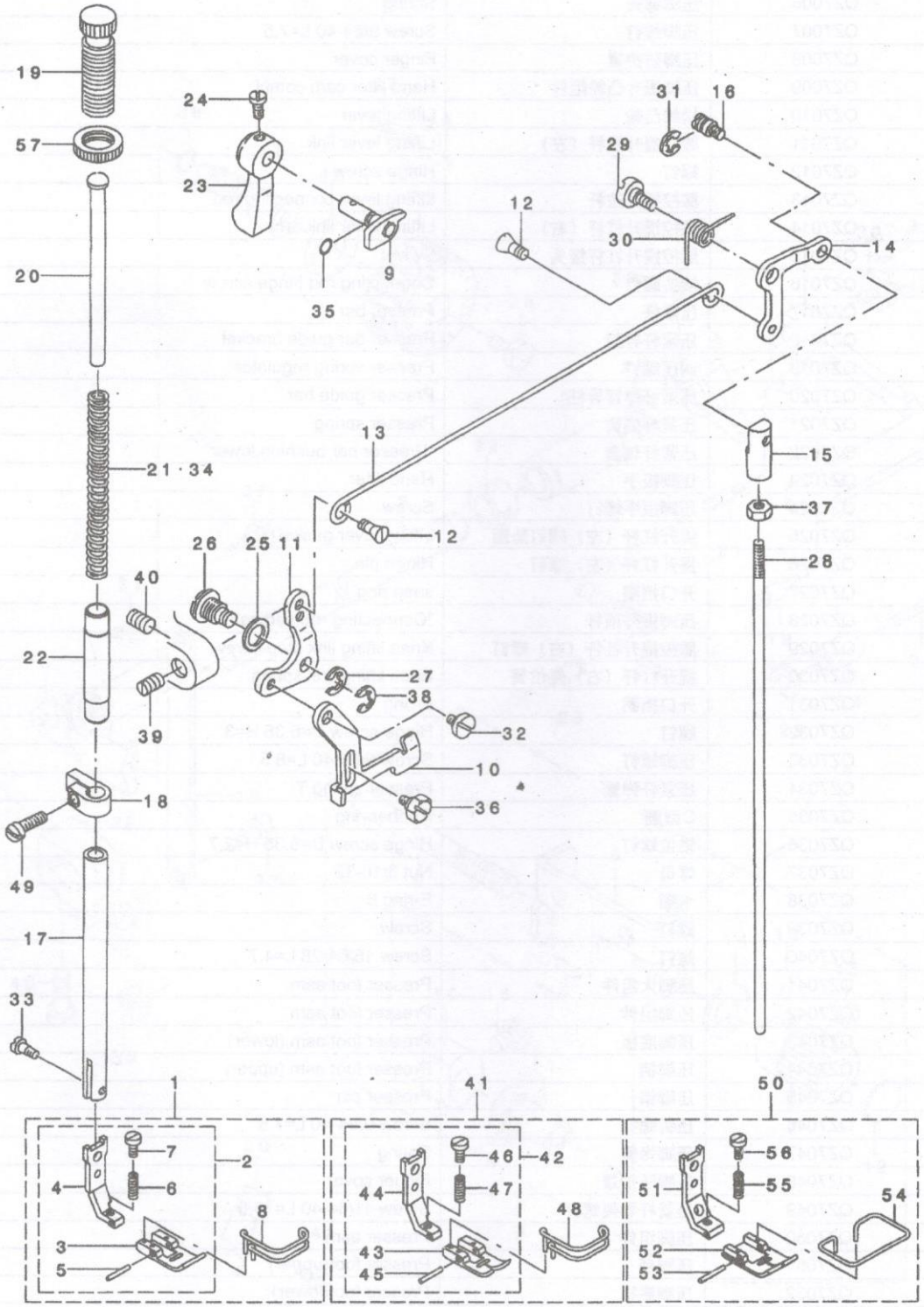

序号	零件代号	名 称	DESCRIPTIPN	数 量
1	QZ7001	压脚大组件	Presser foot asm.	1
2	QZ7002	压脚组件	Presser foot asm.	(1)
3	QZ7003	压脚底板	Presser foot(lower)	(1)
4	QZ7004	压脚柄	Presser foot(upper)	(1)
5	QZ7005	压脚销	Presser pin	(1)
6	QZ7006	压脚弹簧	Spring	(1)
7	QZ7007	压脚螺钉	Screw 9/64-40 L=7.5	(1)
8	QZ7008	压脚防护罩	Finger cover	(1)
9	QZ7009	压脚提升凸轮组件	Hand lifter cam compl	1
10	QZ7010	松线凸轮	Lifting lever	1
11	QZ7011	膝控提升杠杆（左）	Lifting lever link	1
12	QZ7012	螺钉	Hinge screw	2
13	QZ7013	膝控提升拉杆	Lifting lever connecting rod	1
14	QZ7014	膝控提升杠杆（右）	Lifting lever link arm	1
15	QZ7015	膝控提升杠杆接头	Swivel	1
16	QZ7016	接头螺钉	Connecting rod hinge screw	1
17	QZ7017	压紧杆	Presser bar	1
18	QZ7018	压紧杆导架	Presser bar guide bracket	1
19	QZ7019	调压螺钉	Presser spring regulator	1
20	QZ7020	压紧杆弹簧导柱	Presser guide bar	1
21	QZ7021	压紧杆弹簧	Presser spring	1
22	QZ7022	压紧杆轴套	"Presser bar bushing,lower"	1
23	QZ7023	压脚扳手	Hand lifter	1
24	QZ7024	压脚扳手螺钉	Screw	1
25	QZ7025	提升杠杆（左）螺钉垫圈	Lifting lever gasket	1
26	QZ7026	提升杠杆（左）螺钉	Hinge pin	1
27	QZ7027	开口挡圈	snap ring	1
28	QZ7028	压脚提升顶杆	"Connecting rod,vertical"	1
29	QZ7029	膝控提升杠杆（右）螺钉	Knee lifting link step-screw	1
30	QZ7030	提升杠杆（右）复位簧	Knee lifting link spring	1
31	QZ7031	开口挡圈	E-ring	1
32	QZ7032	螺钉	Hinge screw D=6.35 H=3	1
33	QZ7033	压脚螺钉	Screw 9/64-40 L=8.5	1
34	QZ7034	压紧杆弹簧	Presser spring T	1
35	QZ7035	O型圈	Rubber ring	1
36	QZ7036	轴位螺钉	Hinge screw D=6.35 H=2.7	1
37	QZ7037	螺母	Nut 3/16-32	1
38	QZ7038	卡圈	E-ring 6	1
39	QZ7039	螺钉	Screw	1
40	QZ7040	螺钉	Screw 15/64-28 L=4.7	1
41	QZ7041	压脚大组件	Presser foot asm.	1
42	QZ7042	压脚组件	Presser foot asm.	(1)
43	QZ7043	压脚底板	Presser foot asm.(lower)	(1)
44	QZ7044	压脚柄	Presser foot asm.(upper)	(1)
45	QZ7045	压脚销	Presser pin	(1)
46	QZ7046	压脚螺钉	Screw 9/64-40 L=7.5	(1)
47	QZ7047	压脚弹簧	Spring	(1)
48	QZ7048	压脚防护罩	Finger cover	(1)
49	QZ7049	压紧杆导架螺钉	Screw 11/64-40 L=10.5	1
50	QZ7050	压脚组件	Presser asm.	1
51	QZ7051	压脚柄	Presser foot(upper)	(1)
52	QZ7052	压脚底板	Presser foot(lower)	(1)
53	QZ7053	压脚销	Presser pin	(1)
54	QZ7054	压脚防护罩	Safety cover	(1)
55	QZ7055	压脚弹簧	Spring	(1)
56	QZ7056	压脚螺钉	Screw 9/64-40 L=7.5	(1)
57	QZ7057	螺母	Nut	1

8.倒缝部件

Feed mechanism & Condense components

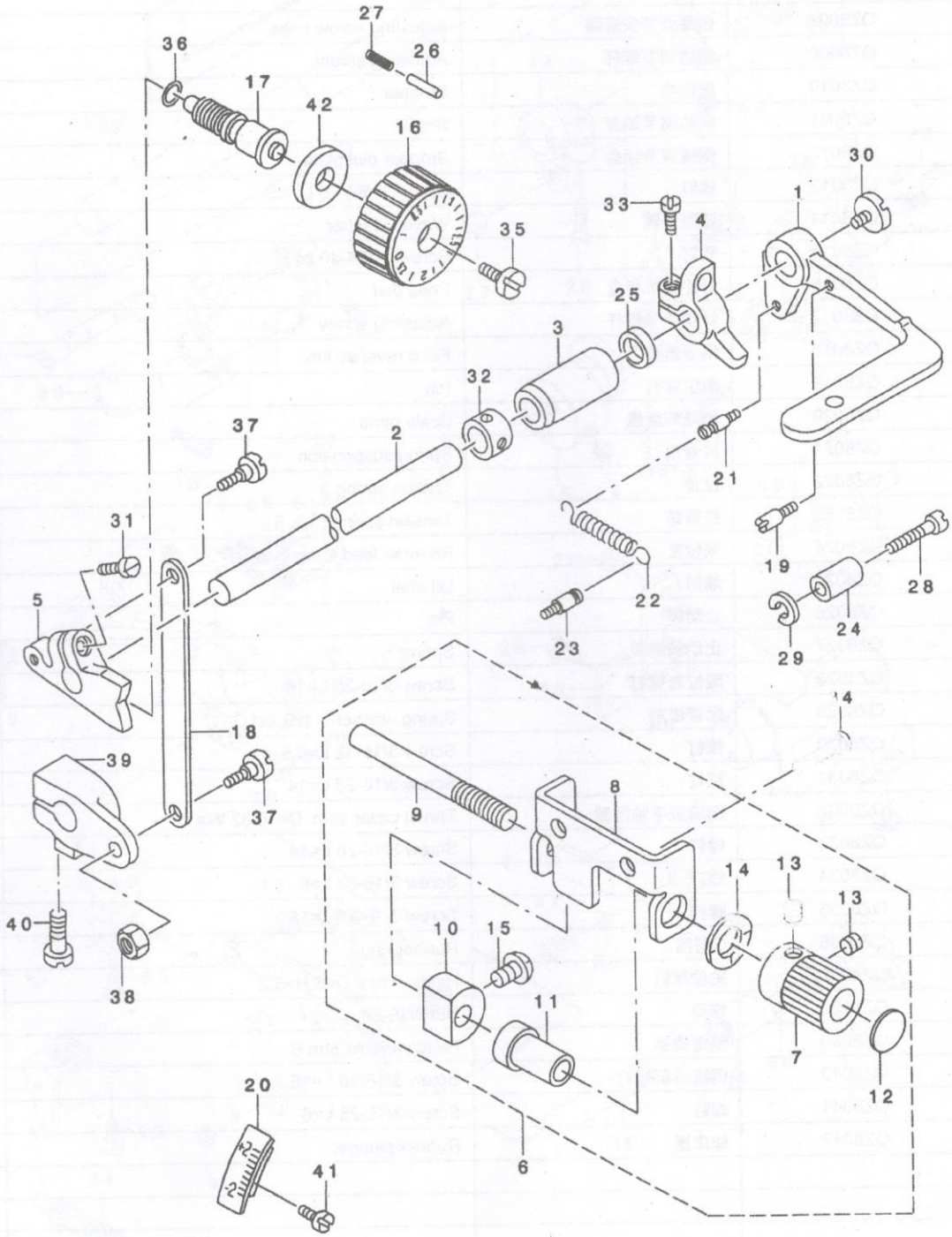

序号	零件代号	名 称	DESCRIPTIPN	数 量
1	QZ8001	倒缝扳手	Lever	1
2	QZ8002	倒缝扳手轴	Shaft	1
3	QZ8003	倒缝扳手轴套	Bushing	1
4	QZ8004	倒缝曲柄	Condense stopper arm asm.	1
5	QZ8005	针距调节曲柄	Feed driving asjuster	1
6	QZ8006	倒缝调节组件	Knob asm.	1
7	QZ8007	倒缝调节旋钮	Knob	(1)
8	QZ8008	倒缝调节安装架	Adjusting screw base	(1)
9	QZ8009	倒缝调节螺杆	Adjusting screw	(1)
10	QZ8010	限位块	Stopper	(1)
11	QZ8011	倒缝调节轴套	Shaft	(1)
12	QZ8012	倒缝调节标盘	Stopper dial plate	(1)
13	QZ8013	螺钉	Screw 11/64-40 L=3.5	(2)
14	QZ8014	波型垫圈	Waved washer	(1)
15	QZ8015	螺钉	Screw 11/64-40 L=7	(1)
16	QZ8016	针距调节标盘	Feed dial	1
17	QZ8017	针距调节螺杆	Adjusting screw	1
18	QZ8018	倒缝连杆	Feed reversal link	1
19	QZ8019	限位螺钉	Pin	1
20	QZ8020	倒缝刻度盘	Scale plate	1
21	QZ8021	拉簧销	Spring suspension	1
22	QZ8022	拉簧	Torsion spring	1
23	QZ8023	拉簧销	Tension spring rack B	1
24	QZ8024	限位套	Reverse feed lever stopper	1
25	QZ8025	油封	Oil seal	1
26	QZ8026	止动销	Pin	1
27	QZ8027	止动销弹簧	Spring	1
28	QZ8028	限位套螺钉	Screw 3/16-28 L=18	1
29	QZ8029	弹簧垫圈	Spring washer 5.1x9.2x1.3	1
30	QZ8030	螺钉	Screw 3/16-32 L=6.5	1
31	QZ8031	螺钉	Screw 3/16-28 L=14	1
32	QZ8032	倒缝扳手轴挡圈	Thrust collar asm. D=10.32 W=1	1
33	QZ8033	螺钉	Screw 3/16-28 L=14	1
34	QZ8034	螺钉	Screw 3/16-32 L=6	2
35	QZ8035	螺钉	Screw 3/16-28 L=18	1
36	QZ8036	O型圈	Rubber ring	1
37	QZ8037	轴位螺钉	Hinge screw D=6 H=3.2	1
38	QZ8038	螺母	Nut 3/16-28	1
39	QZ8039	倒缝曲柄	Feed variable arm B	1
40	QZ8040	倒缝曲柄螺钉	Screw 3/16-28 L=15.5	1
41	QZ8041	螺钉	Screw 3/16-28 L=6	2
42	QZ8042	橡皮圈	Rubber plunger	1

9.送布部件

Feed mechanism components

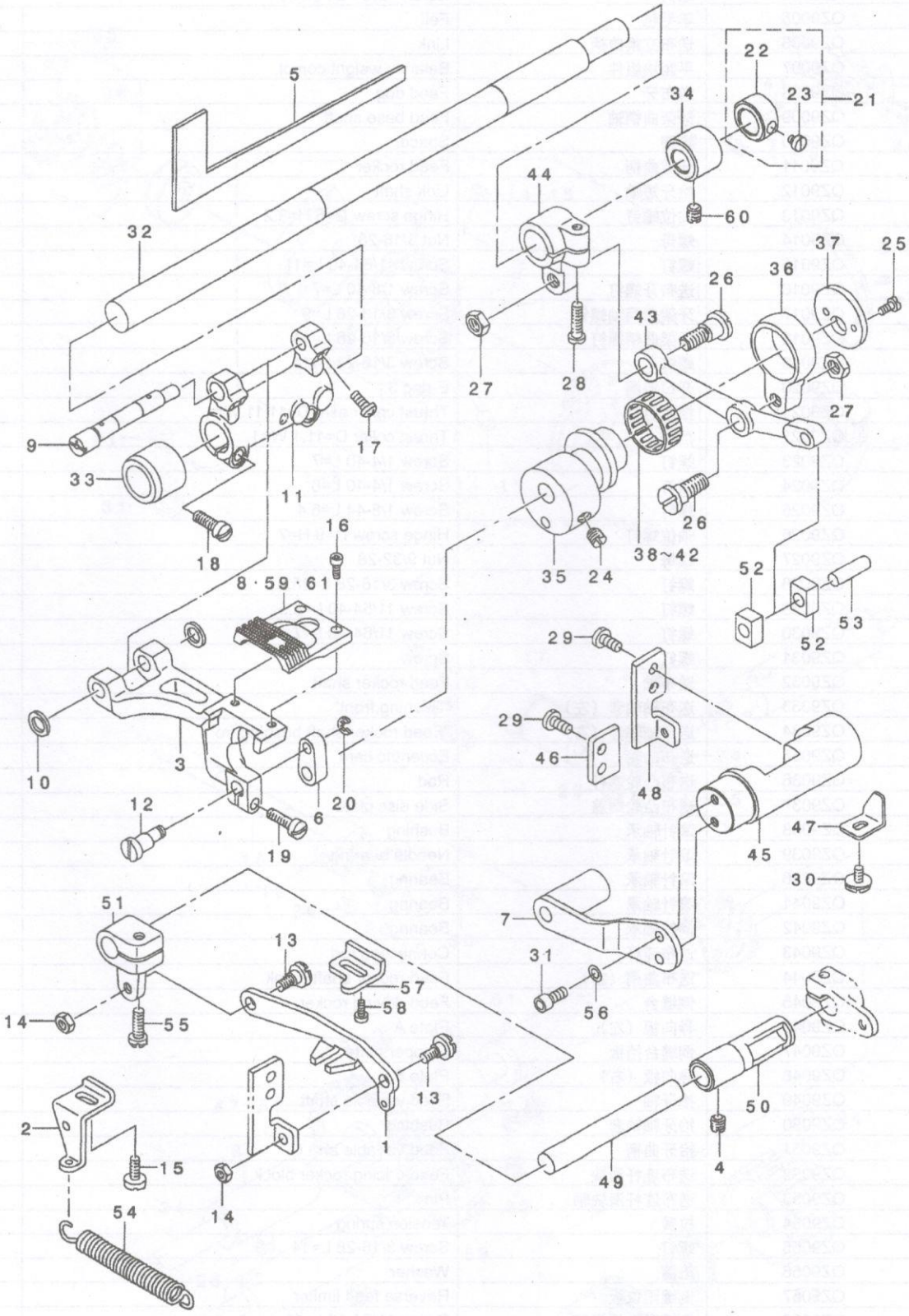

序号	零件代号	名 称	DESCRIPTIPN	数 量
1	QZ9001	送布连杆	Feed reversal link	1
2	QZ9002	拉簧架	Tension spring rack	1
3	QZ9003	牙架	Feed base	1
4	QZ9004	螺钉	Screw 15/64-28 L=4.7	1
5	QZ9005	羊毛毡	Felt	1
6	QZ9006	送布交换曲柄	Link	1
7	QZ9007	平衡块组件	Balance weight compl.	1
8	QZ9008	送布牙	Feed dog	1
9	QZ9009	牙架曲柄轴	Feed base shaft	1
10	QZ9010	垫圈	Spacer	2
11	QZ9011	牙架曲柄	Feed rocker	1
12	QZ9012	抬牙短轴	Link shaft	1
13	QZ9013	轴位螺钉	Hinge screw D=6 H=3.2	2
14	QZ9014	螺母	Nut 3/16-28	2
15	QZ9015	螺钉	Screw 11/64-40 L=11	1
16	QZ9016	送布牙螺钉	Screw 1/8-40 L=7	2
17	QZ9017	牙架曲柄轴螺钉	Screw 3/16-28 L=9	2
18	QZ9018	牙架曲柄螺钉	Screw 3/16-28 L=14	2
19	QZ9019	螺钉	Screw 3/16-28 L=14	1
20	QZ9020	开口挡圈	E-ring 3	1
21	QZ9021	挡圈组件	Thrust collar asm.D=11.11 W=1	1
22	QZ9022	挡圈	Thrust collar D=11.1 W=1	(1)
23	QZ9023	螺钉	Screw 1/4-40 L=7	(1)
24	QZ9024	螺钉	Screw 1/4-40 L=8	2
25	QZ9025	螺钉	Screw 1/8-44 L=6.4	2
26	QZ9026	轴位螺钉	Hinge screw D=9 H=7	2
27	QZ9027	螺母	Nut 9/32-28	2
28	QZ9028	螺钉	Screw 3/16-28 L=15.5	1
29	QZ9029	螺钉	Screw 11/64-40 L=8.5	4
30	QZ9030	螺钉	Screw 11/64-40 L=7	1
31	QZ9031	螺钉	Screw	2
32	QZ9032	送布轴	Feed rocker shaft	1
33	QZ9033	送布轴轴套（左）	"Bushing,front"	1
34	QZ9034	送布轴轴套（右）	"Feed rocker shaft bushing,fro"	1
35	QZ9035	送布凸轮	Eccentric cam	1
36	QZ9036	送布凸轮连杆	Rod	1
37	QZ9037	送布凸轮端盖	Side disc plate	1
38	QZ9038	滚针轴承	Bushing	1
39	QZ9039	滚针轴承	Needle bearing	1
40	QZ9040	滚针轴承	Bearing	1
41	QZ9041	滚针轴承	Bearing	1
42	QZ9042	滚针轴承	Bearing	1
43	QZ9043	送布连杆	Connecting rod	1
44	QZ9044	送布曲柄（右）	Feed rocker shaft crank	1
45	QZ9045	倒缝台	Feed driving rocker	1
46	QZ9046	导向板（左）	Plate A	1
47	QZ9047	倒缝台挡板	Stopper plate	1
48	QZ9048	导向板（右）	Plate B	1
49	QZ9049	抬牙轴	Feed variable shaft	1
50	QZ9050	抬牙轴轴套	Bushing	1
51	QZ9051	抬牙曲柄	Feed variable arm C	1
52	QZ9052	送布连杆滑块	Feed dricing rocker block	2
53	QZ9053	送布连杆滑块轴	Pin	1
54	QZ9054	拉簧	Tension spring	1
55	QZ9055	螺钉	Screw 3/16-28 L=14	1
56	QZ9056	垫圈	Washer	2
57	QZ9057	倒缝限位板	Reverse feed limiter	1
58	QZ9058	倒缝限位板螺钉	Screw 11/64-40 L=11	1
59	QZ9059	送布牙	Feed dog	1
60	QZ9060	螺钉	Screw 15/64-28 L=7	2
61	QZ9061	送布牙	Feed dog	1

10.下轴部件

Hook driving shaft & Hook components

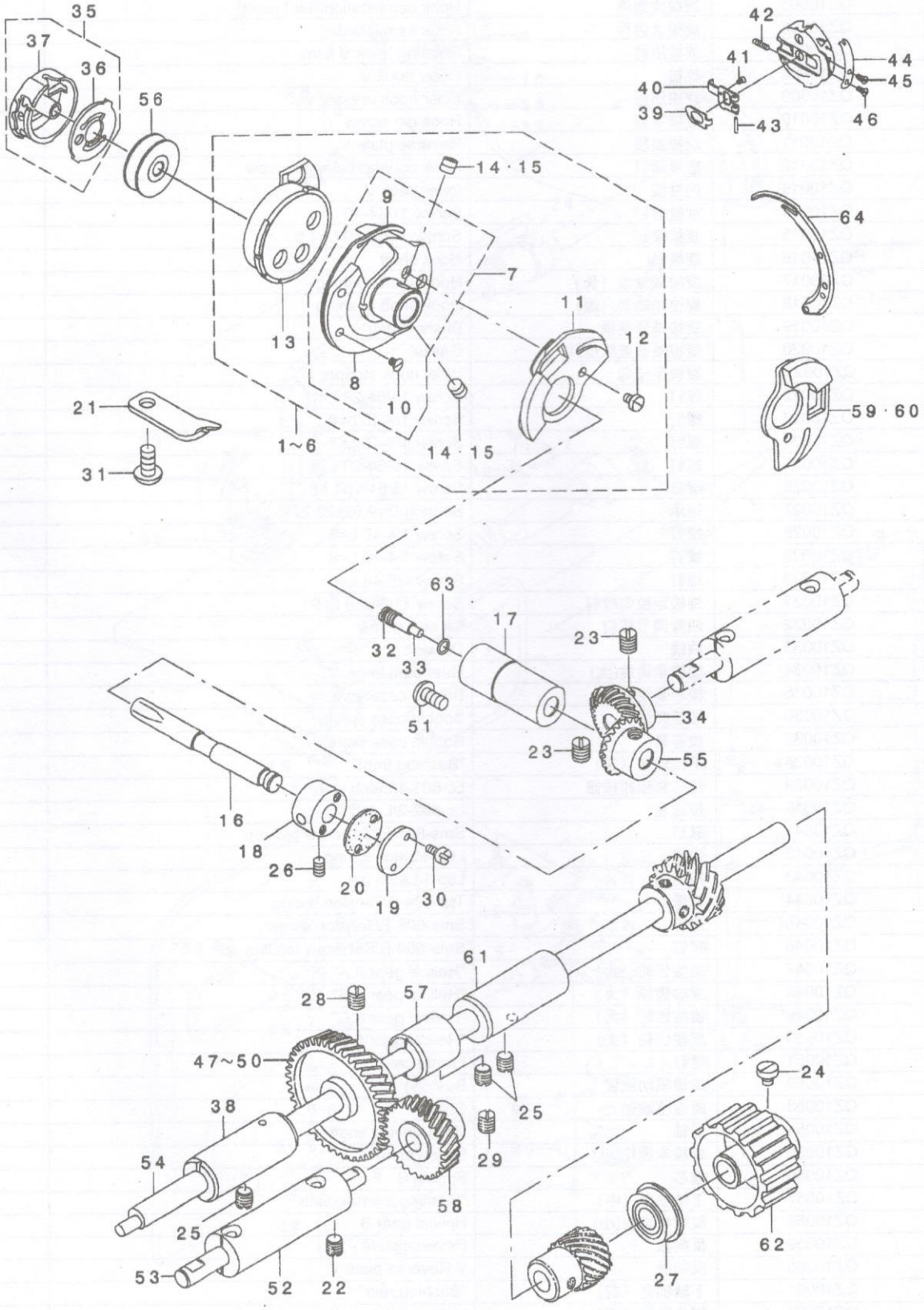

序号	零件代号	名 称	DESCRIPTIPN	数 量
1	QZ10001	旋梭大组件	"Hook compl.,right"	1
2	QZ10002	旋梭大组件	Hook compl.V	1
3	QZ10003	旋梭大组件	Hook compl.V(plastic hook)	1
4	QZ10004	旋梭大组件	Hook compl.V(hard point)	1
5	QZ10005	旋梭大组件	Hook combination(hard point)	1
6	QZ10006	旋梭大组件	Hook asm.(plastic)	1
7	QZ10007	旋梭组件	Rotating hook V asm.	(1)
8	QZ10008	旋梭	Outer hook V	(1)
9	QZ10009	旋梭压板	Inner hook presser v-s	(1)
10	QZ10010	旋梭螺钉	Hook gib screw	(2)
11	QZ10011	旋梭盖板	Reverse plate V	(1)
12	QZ10012	盖板螺钉	Hook counter balance screw	(1)
13	QZ10013	内旋梭	Inner hook V	(1)
14	QZ10014	旋梭螺钉	Screw 11/64-40 L=4	(2)
15	QZ10015	旋梭螺钉	Screw 11/64-40 L=4.5	(2)
16	QZ10016	旋梭轴	Hook shaft	1
17	QZ10017	旋梭轴轴套（长）	Hook shaft bushing	1
18	QZ10018	旋梭轴轴套（短）	Hook shaft bushing	1
19	QZ10019	旋梭轴套盖板	Bushing gap	1
20	QZ10020	旋梭轴套盖板垫片	Gasket	1
21	QZ10021	旋梭定位勾	Inner hook stopper	1
22	QZ10022	螺钉	Screw 15/64-28 L=7	1
23	QZ10023	螺钉	Screw 1/4-40 L=8	4
24	QZ10024	螺钉	Screw 1/4-40 L=7	2
25	QZ10025	螺钉	Screw 15/64-28 L=7	3
26	QZ10026	螺钉	Screw 15/64-28 L=8	1
27	QZ10027	轴承	Bearing D=9.52x22.22	1
28	QZ10028	螺钉	Screw 1/4-40 L=8	2
29	QZ10029	螺钉	Screw 1/4-40 L=8	2
30	QZ10030	螺钉	Screw 1/8-44 L=6	2
31	QZ10031	旋梭定位勾螺钉	Screw 11/64-40 L=9	1
32	QZ10032	油量调节螺钉	Oil seal screw	1
33	QZ10033	油线	Oil wick	1
34	QZ10034	旋梭伞齿轮(大)	Gear asm.large	1
35	QZ10035	梭芯套组件	Bobbin case asm.	1
36	QZ10036	梭芯套弹簧	Bobbin case spring	(1)
37	QZ10037	梭芯套	Bobbin case compl.	(1)
38	QZ10038	下轴轴套（左）	"Bushing,front"	1
39	QZ10039	梭芯套锁扣按钮	Lc-601-1/Latch lever	1
40	QZ10040	按钮座	Lc-602-2/Latch	1
41	QZ10041	螺钉	Sms-801-B/Setscrew pick-up	1
42	QZ10042	弹簧	Lsp-4/Latch spring	1
43	QZ10043	按钮销	Lsp-1/Latch pin	1
44	QZ10044	弹簧片	Tsp-604-B/Tension spring	1
45	QZ10045	螺钉	Sms-608-B/Tension screw	1
46	QZ10046	螺钉	Sms-609-B/Setscrew tension sp	1
47	QZ10047	旋梭齿轮（大）	"Helical gear A,A"	1
48	QZ10048	旋梭齿轮（大）	"Helical gear A,B"	1
49	QZ10049	旋梭齿轮（大）	"Helical gear A,C"	1
50	QZ10050	旋梭齿轮（大）	"Helical gear A,D"	1
51	QZ10051	螺钉	Front screw	1
52	QZ10052	旋梭驱动轴套	Bushing	1
53	QZ10053	旋梭驱动轴	Shaft	1
54	QZ10054	下轴	Hook driving shaft	1
55	QZ10055	旋梭伞齿轮(小)	Pinion asm.	1
56	QZ10056	梭芯	Bobbin S	1
57	QZ10057	下轴轴套（中）	"Bushing,intermediate"	1
58	QZ10058	旋梭伞齿轮(小)	Helical gear B	1
59	QZ10059	反向板	Reverse plate	1
60	QZ10060	反向板	V Reverse plate V	1
61	QZ10061	下轴轴套（右）	"Bushing,rear"	1
62	QZ10062	同步带轮（下）	Hook driving shaft sprocket	1
63	QZ10063	O型圈	Rubber ring	1
64	QZ10064	旋梭保护勾	Inner presser V-S4	1

11.供油部件

Lubrication components

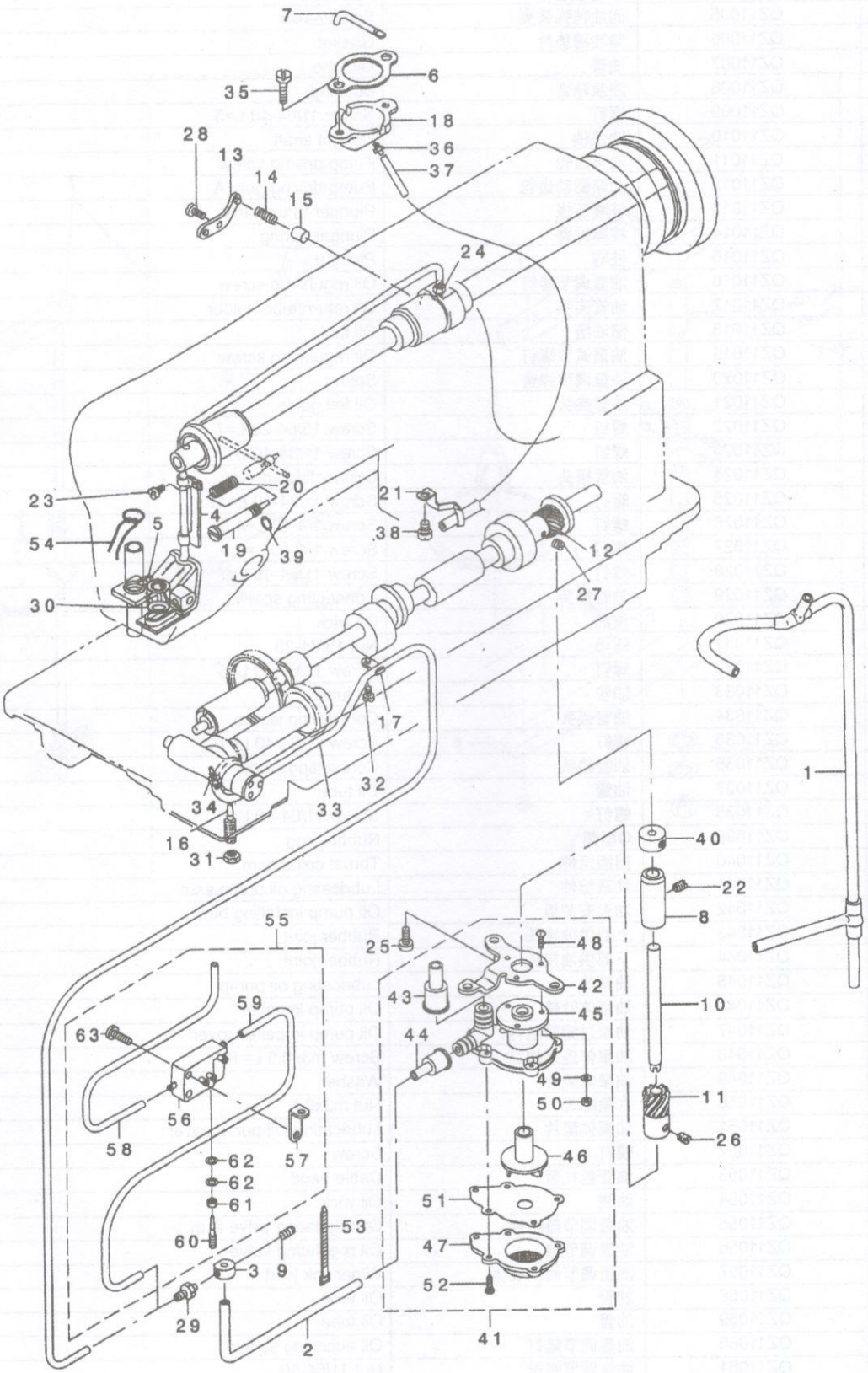

序号	零件代号	名 称	DESCRIPTIPN	数 量
1	QZ11001	供油管组件	Oil supply pipe asm.	1
2	QZ11002	供油管	Oil supply pipe	1
3	QZ11003	接头	Distributor	1
4	QZ11004	羊毛毡组件	Felt asm.	1
5	QZ11005	回油毡弹簧夹	Felt presser	1
6	QZ11006	储油槽垫片	Gasket	1
7	QZ11007	油管	Oil tube	1
8	QZ11008	油泵轴套	Bushing	1
9	QZ11009	螺钉	Screw 11/64-40 L=5	1
10	QZ11010	油泵轴	Upright shaft	1
11	QZ11011	油泵齿轮	Pump driving screw	1
12	QZ11012	油泵驱动齿轮	Pump driving gear A	1
13	QZ11013	柱塞压板	Plunger thrust plate	1
14	QZ11014	柱塞弹簧	Plunger spring	1
15	QZ11015	柱塞	Plunger	1
16	QZ11016	油量调节螺钉	Oil regulating screw	1
17	QZ11017	油管夹头	Oil return tube holder	1
18	QZ11018	储油槽	Oil tank	1
19	QZ11019	油量调节螺钉	Oil regulating screw	1
20	QZ11020	油量调节弹簧	Spring	1
21	QZ11021	油管夹头	Oil felt guide	1
22	QZ11022	螺钉	Screw 15/64-28 L=7	1
23	QZ11023	螺钉	Screw 11/64-40 L=7	1
24	QZ11024	油管接头	Connecting screw	1
25	QZ11025	螺钉	Screw 11/64-40 L=11	2
26	QZ11026	螺钉	Screw 1/4-40 L=4.5	2
27	QZ11027	螺钉	Screw 1/4-40 L=4.5	2
28	QZ11028	螺钉	Screw 11/64-40 L=7	1
29	QZ11029	油管接头	Connecting screw	1
30	QZ11030	油线	Oil wick	0.2
31	QZ11031	螺母	Nut 15/64-28	1
32	QZ11032	螺钉	Screw 11/64-40 L=5	1
33	QZ11033	油管	Oil tube	0.33
34	QZ11034	油管接头	Connecting screw	2
35	QZ11035	螺钉	Screw 11/64-40 L=14	2
36	QZ11036	油管接头	Connecting screw	1
37	QZ11037	油管	Oil tube	0.3
38	QZ11038	螺钉	Screw 11/64-40 L=5	1
39	QZ11039	O型圈	Rubber ring	1
40	QZ11040	挡圈组件	Thrust collar asm.	1
41	QZ11041	油泵组件	Lubricating oil pump asm.	1
42	QZ11042	油泵安装板	Oil pump installing base	(1)
43	QZ11043	上部供油接头	Rubber joint	(1)
44	QZ11044	下部供油接头	Rubber joint	(1)
45	QZ11045	油泵体	Lubricating oil pump	(1)
46	QZ11046	油泵体叶轮	Oil pump impeller	(1)
47	QZ11047	油泵过滤网组件	Oil pump impeller cover	(1)
48	QZ11048	油泵体连接螺钉	Screw m3x0.5 L=10	(3)
49	QZ11049	油泵体垫片	Washer	(3)
50	QZ11050	六角螺母	Nut m3x0.5	(3)
51	QZ11051	油泵体垫片	Lubricating Oil pump cover	(3)
52	QZ11052	螺钉	Screw	(5)
53	QZ11053	油管包扎带	Cable band	1
54	QZ11054	油线	Oil wick	0.2
55	QZ11055	油量调节器组件	Oil regulating valve asm.	1
56	QZ11056	油量调节器	Oil regulating valve	(1)
57	QZ11057	油量调节器安装板	Wiper link joint	(1)
58	QZ11058	油管	Oil tube	(0.18)
59	QZ11059	油管	Oil tube	(0.14)
60	QZ11060	油量调节螺钉	Oil adjusting screw	(1)
61	QZ11061	油量调节螺母	Nut 11/64-40	(1)
62	QZ11062	垫圈	Washer	(2)
63	QZ11063	螺钉	Screw 11/64-40 L=14	(1)

12.线架部件

Thread stand components

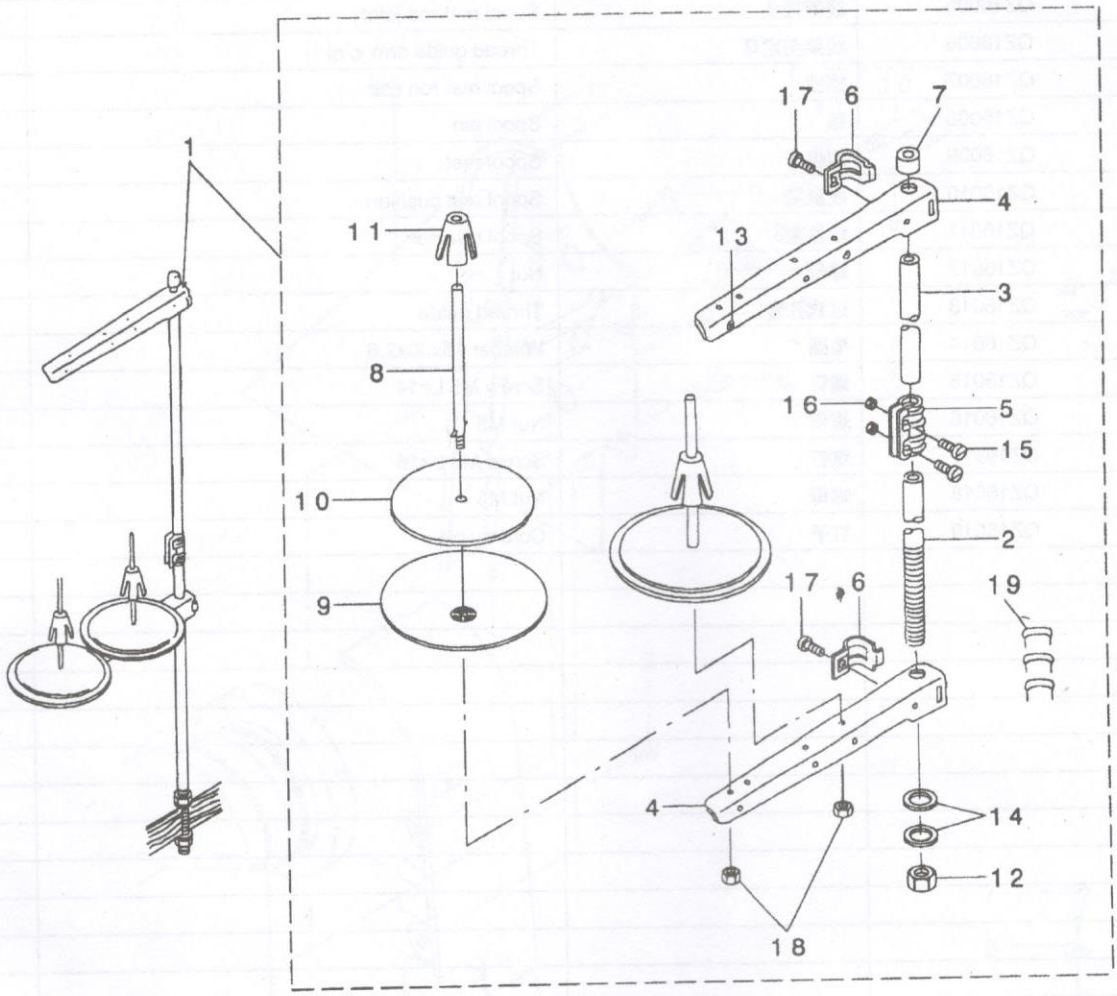

序号	零件代号	名 称	DESCRIPTIPN	数 量
1	QZ16001	线架组件	Thread stand asm.	1
2	QZ16002	线架支撑管（下）	"Spool rest rod,lower"	(1)
3	QZ16003	线架支撑管（上）	"spool rest rod,upper"	(1)
4	QZ16004	过线架	Thread guide arm B	(2)
5	QZ16005	线架接头	Spool rest rod joint	(1)
6	QZ16006	线架固定环	Thread guide arm joint	(2)
7	QZ16007	挡圈	Spool rest rod cap	(1)
8	QZ16008	销	Spool pin	(2)
9	QZ16009	线盘	Spool rest	(2)
10	QZ16010	线盘垫	Spool rest cushion	(2)
11	QZ16011	线盘盖	Spool retainer	(2)
12	QZ16012	螺母	Nut	(1)
13	QZ16013	过线孔套	Thread guide	(2)
14	QZ16014	垫圈	Washer 16x30x2.6	(2)
15	QZ16015	螺钉	Screw M5 L=14	(2)
16	QZ16016	螺母	Nut M5	(2)
17	QZ16017	螺钉	Screw M6 L=16	(2)
18	QZ16018	螺母	Nut M5	(2)
19	QZ16019	钉子	Cord staple	(3)

13.皮带罩部件

Belt cover components

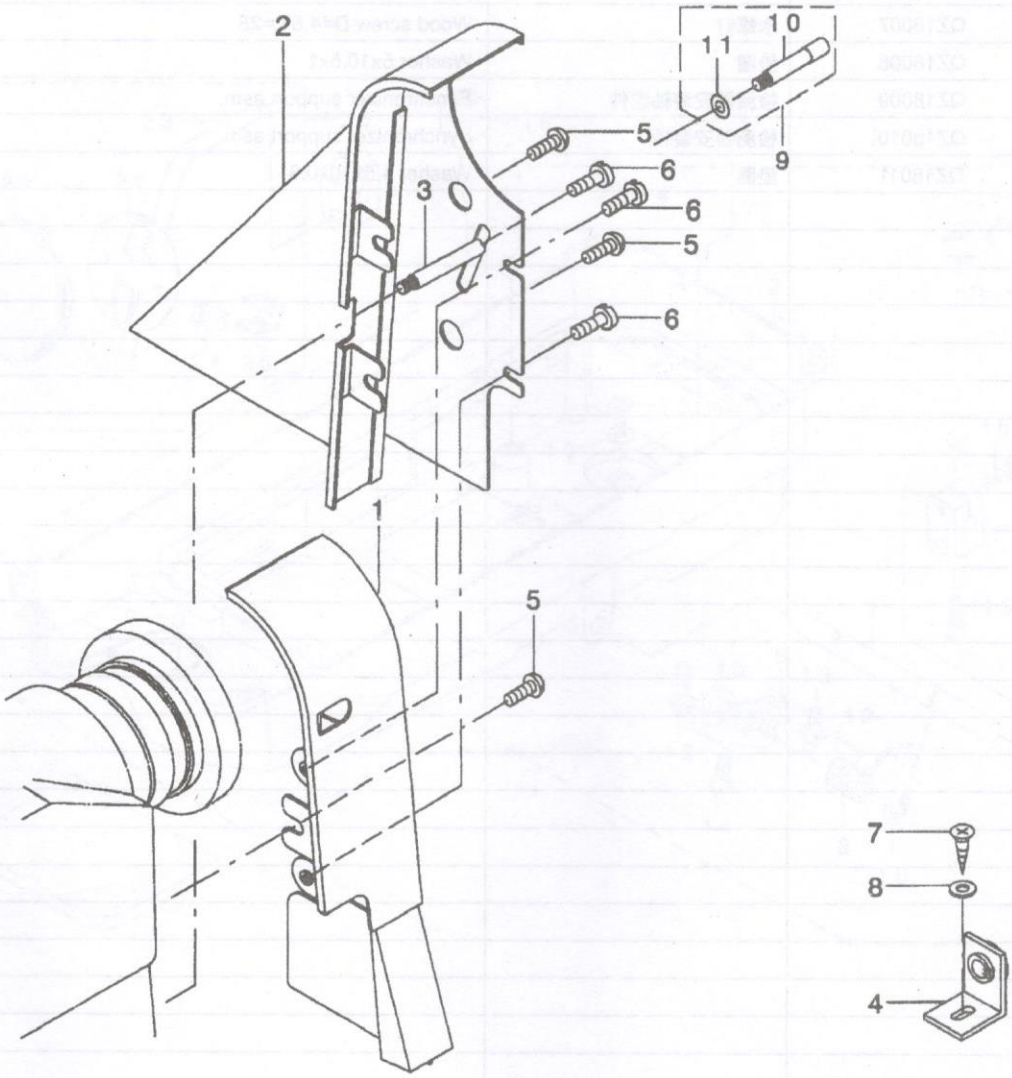

序号	零件代号	名 称	DESCRIPTIPN	数 量
1	QZ18001	皮带罩（A）	Belt cover A	1
2	QZ18002	皮带罩（B）	Belt cover B	1
3	QZ18003	皮带罩支撑螺钉	Belt cover support stud	1
4	QZ18004	固定架	Belt cover press plate	1
5	QZ18005	螺钉	Screw 15/64-28 L=9	3
6	QZ18006	螺钉	Screw 11/64-40 L=4.3	3
7	QZ18007	木螺钉	Wood screw D=4.8 L=25	1
8	QZ18008	垫圈	Washer 5x10.5x1	1
9	QZ18009	检测器安装轴组件	Synchronizer support asm.	1
10	QZ18010	检测器安装轴	Synchronizer support asm.	(1)
11	QZ18011	垫圈	Washer 4.5x10x0.8	(1)

14.油盘部件

Oil reservoir & Knee lifter components

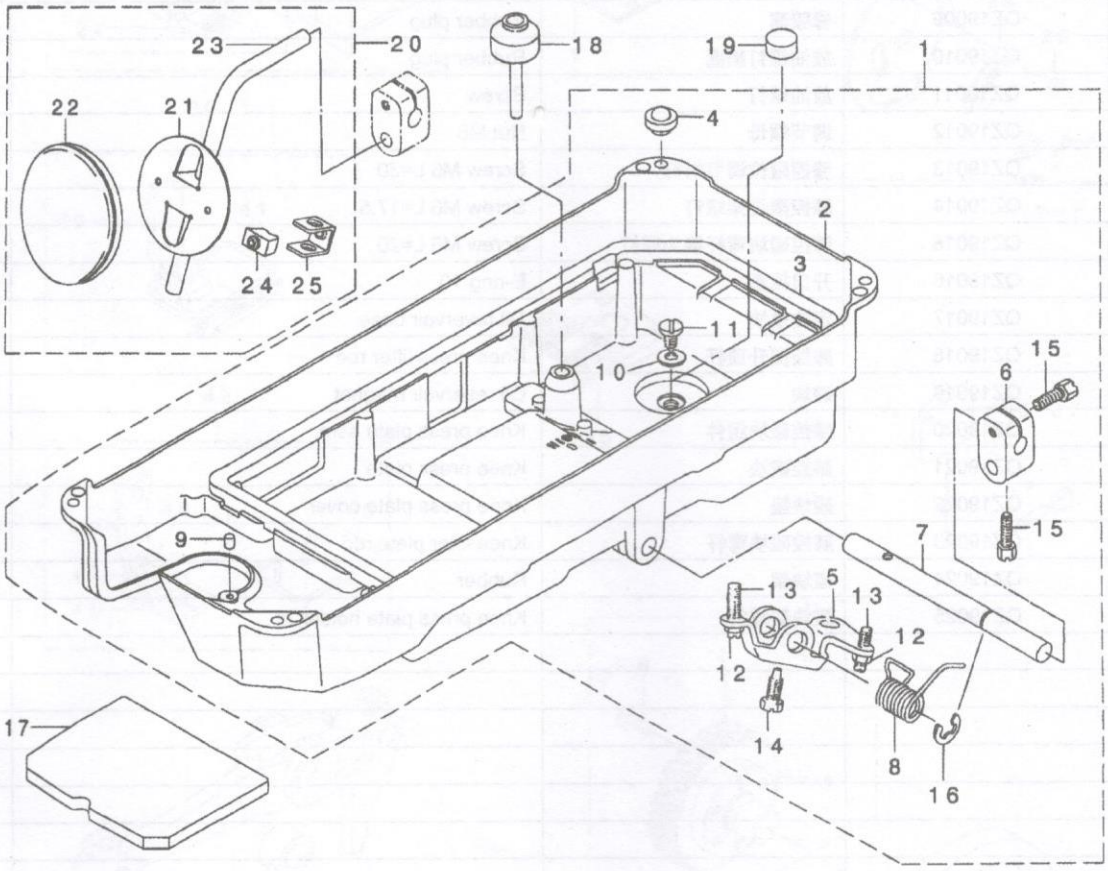

序号	零件代号	名 称	DESCRIPTIPN	数 量
1	QZ19001	油盘组件	Oil reservoir asm.	1
2	QZ19002	油盘	Oil reservoir	(1)
3	QZ19003	油盘垫	Oil reservoir gasket	(1)
4	QZ19004	橡胶垫	Rubber cushion	(4)
5	QZ19005	膝控限位架	"Connecting rot,vertical"	(1)
6	QZ19006	碰块弯杆接头	Bracket	(1)
7	QZ19007	膝控铰链轴	Knee press rod	(1)
8	QZ19008	膝控复位弹簧	Spring	(1)
9	QZ19009	橡胶塞	Rubber plug	(1)
10	QZ19010	放油螺钉垫圈	Rubber plug	(1)
11	QZ19011	放油螺钉	Screw	(1)
12	QZ19012	调节螺母	Nut M6	(2)
13	QZ19013	膝控限位调节螺钉	Screw M6 L=30	(2)
14	QZ19014	膝控限位架螺钉	Screw M6 L=17.5	(1)
15	QZ19015	膝控碰块弯杆接头螺钉	Screw M6 L=20	(2)
16	QZ19016	开口挡圈	E-ring 10	(1)
17	QZ19017	定位量块	Oil revervoir base	1
18	QZ19018	膝控提升顶杆	Knee press lifter rod	1
19	QZ19019	磁块	Oil reservoir magnet	1
20	QZ19020	膝控碰块组件	Knee press plate asm.	1
21	QZ19021	膝控碰块	Knee press plate	(1)
22	QZ19022	碰块垫	Knee press plate cover	(1)
23	QZ19023	膝控碰块弯杆	Knee lifter plate rod	(1)
24	QZ19024	碰块架	Rubber	(1)
25	QZ19025	碰块架螺钉	Knee press plate holder	(1)

15.2286N专用零件
Exclusive parts for 2286N

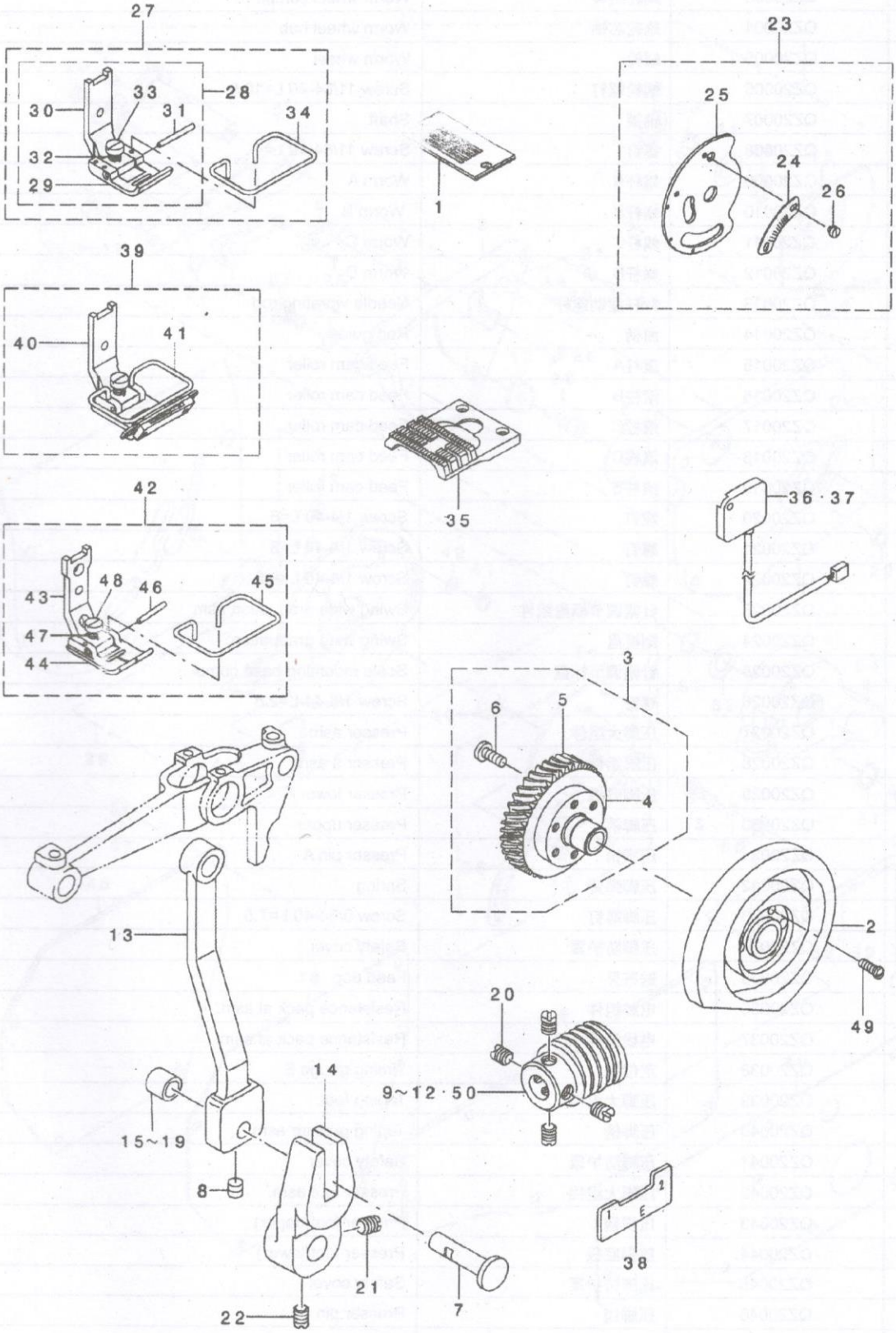

序号	零件代号	名 称	DESCRIPTIPN	数 量
1	QZ20001	针板	Needle plate	
2	QZ20002	凸轮	Needle vibrating cam A	
3	QZ20003	蜗轮组件	Worm wheel compl.	
4	QZ20004	蜗轮芯轴	Worm wheel hub	
5	QZ20005	蜗轮	Worm wheel	
6	QZ20006	蜗轮螺钉	Screw 11/64-40 L=10.5	
7	QZ20007	轴销	Shaft	
8	QZ20008	螺钉	Screw 11/64-40 L=4	
9	QZ20009	蜗杆A	Worm A	
10	QZ20010	蜗杆B	Worm B	
11	QZ20011	蜗杆C	Worm C	
12	QZ20012	蜗杆D	Worm D	
13	QZ20013	针杆摆动连杆	Needle vibrating rod	
14	QZ20014	曲柄	Rod guide	
15	QZ20015	滚柱A	Feed cam roller	
16	QZ20016	滚柱B	Feed cam roller	
17	QZ20017	滚柱C	Feed cam roller	
18	QZ20018	滚柱D	Feed cam roller	
19	QZ20019	滚柱E	Feed cam roller	
20	QZ20020	螺钉	Screw 1/4-40 L=6	
21	QZ20021	螺钉	Screw 1/4-40 L=8	
22	QZ20022	螺钉	Screw 1/4-40 L=8.5	
23	QZ20023	针幅调节标盘组件	Swing wide graduation asm.	
24	QZ20024	刻度盘	Swing wide graduation	
25	QZ20025	针幅调节标盘	Scale mounting base compl.	
26	QZ20026	螺钉	Screw 1/8-44 L=2.5	
27	QZ20027	压脚大组件	Presser asm.	
28	QZ20028	压脚组件	Presser a asm.	
29	QZ20029	压脚底板	Presser lower A	
30	QZ20030	压脚柄	Presser upper	
31	QZ20031	压脚销	Presser pin A	
32	QZ20032	压脚弹簧	Spring	
33	QZ20033	压脚螺钉	Screw 9/64-40 L=7.5	
34	QZ20034	压脚防护罩	Safety cover	
35	QZ20035	送布牙	Feed dog	
36	QZ20036	电线组件	Resistance pack al asm.	
37	QZ20037	电线组件	Resistance pack af asm.	
38	QZ20038	定位块	Timing gauge E	
39	QZ20039	压脚大组件	Taping foot	
40	QZ20040	压脚柄	Taping presser asm.	
41	QZ20041	压脚防护罩	Safety cover	
42	QZ20042	压脚大组件	Presser foot asm.	
43	QZ20043	压脚柄	Presser foot(upper)	
44	QZ20044	压脚底板	Presser foot(lower)	
45	QZ20045	压脚防护罩	Safety cover	
46	QZ20046	压脚销	Presser pin	
47	QZ20047	压脚弹簧	Spring	
48	QZ20048	压脚螺钉	Screw 9/64-40 L=7.5	
49	QZ20049	压脚螺钉	Screw 11/64-40 L=14	

16.2288N专用零件 (1)

Exclusive parts for 2288N(1)

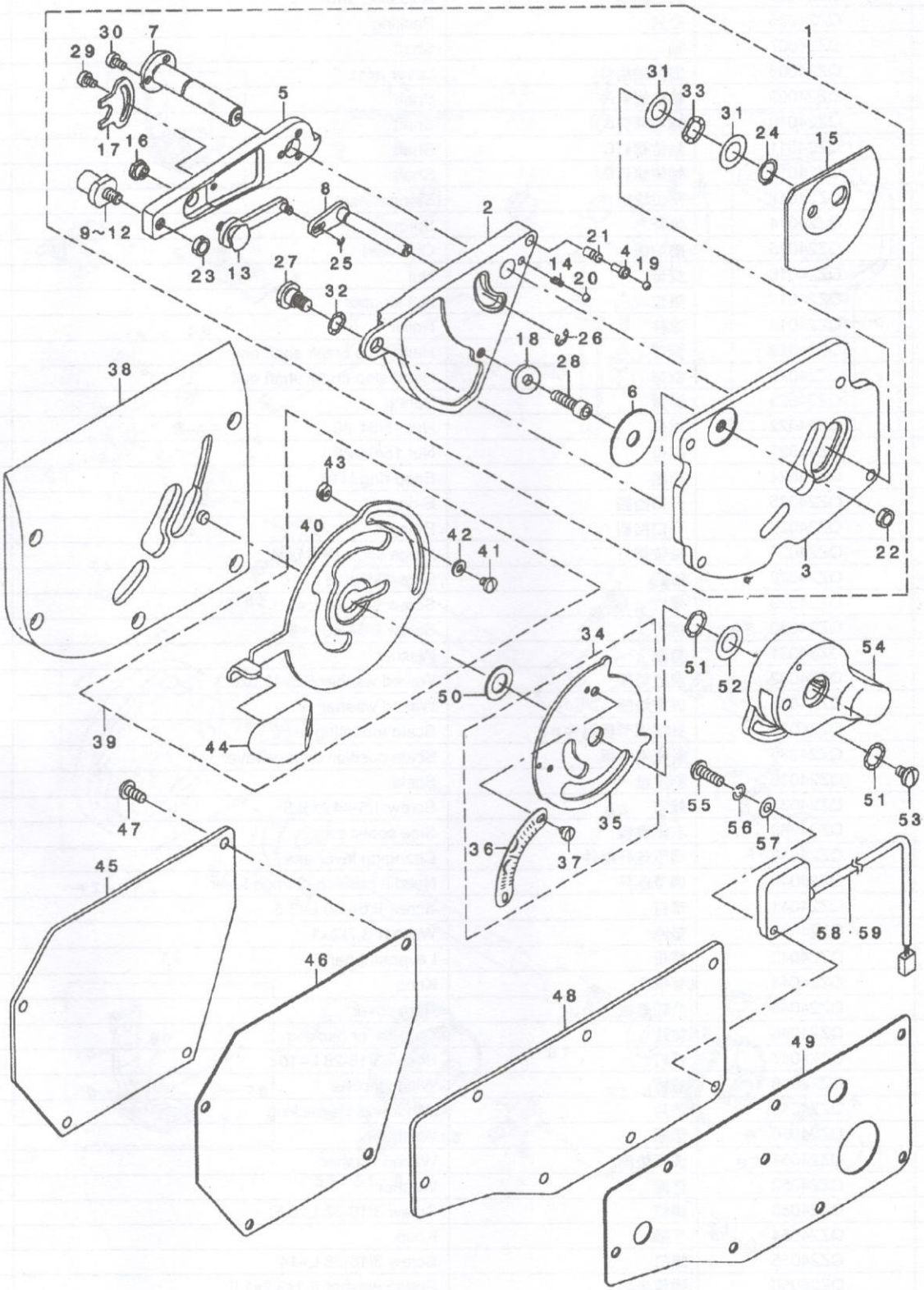

序号	零件代号	名 称	DESCRIPTIPN	数 量
1	QZ24001	针位置调节组件	Position change base asm.	1
2	QZ24002	针位置调节座	Needle position change base	(1)
3	QZ24003	安装板	Fitting plate	(1)
4	QZ24004	调节销	Chaning stopper	(1)
5	QZ24005	调整曲柄	Adjusting arm	(1)
6	QZ24006	垫片	Packing	(1)
7	QZ24007	轴	Shaft	(1)
8	QZ24008	曲柄轴组件	Lever asm.	(1)
9	QZ24009	轴位螺钉A	Shaft	(1)
10	QZ24010	轴位螺钉B	Shaft	(1)
11	QZ24011	轴位螺钉C	Shaft	(1)
12	QZ24012	轴位螺钉D	Shaft	(1)
13	QZ24013	限位块组件	Stopper asm.	(1)
14	QZ24014	弹簧	Spring	(1)
15	QZ24015	防油板	Oil shield	(1)
16	QZ24016	螺母	Nut	(1)
17	QZ24017	限位块	Nut stopper	(1)
18	QZ24018	滚柱	Roller	(1)
19	QZ24019	钢球	Hand stop crank shaft ball	(1)
20	QZ24020	钢球	Hand stop crank shaft ball	(1)
21	QZ24021	弹簧	Spring	(1)
22	QZ24022	螺母	Nut 15/64-28	(1)
23	QZ24023	螺母	Nut 15/64-28	(1)
24	QZ24024	挡圈	Snap ring M10	(1)
25	QZ24025	开口挡圈	E-ring	(1)
26	QZ24026	开口挡圈	E-ring 4	(1)
27	QZ24027	轴位螺钉	Hinge scew D=8 H=4	(1)
28	QZ24028	螺钉	Screw M5x0.8 L=16	(1)
29	QZ24029	螺钉	Screw 9/64-40 L=5.0	(1)
30	QZ24030	螺钉	Screw 9/64-40 L=6	(3)
31	QZ24031	垫圈	Washer	(2)
32	QZ24032	波型垫圈	Waved washer 8.5x12.5x0.3	(3)
33	QZ24033	波型垫圈	Waved washer	(1)
34	QZ24034	针幅调节板组件	Scale mounting asm.	1
35	QZ24035	针幅调节板	Scale position change lever	(1)
36	QZ24036	刻度盘	Scale	(1)
37	QZ24037	螺钉	Screw 1/8-44 L=2.5	(2)
38	QZ24038	右侧盖板	Side cober asm.	1
39	QZ24039	调节连杆组件	Changing lever asm.	1
40	QZ24040	调节连杆	Needle position change lever	(1)
41	QZ24041	螺钉	Screw 9/64-40 L=3.5	(2)
42	QZ24042	垫圈	Washer 3.7x8x1	(2)
43	QZ24043	螺母	Lever stopper	(2)
44	QZ24044	手柄	Knob	(1)
45	QZ24045	凸轮盖板	Cam cover	1
46	QZ24046	垫片	Cam cover packing	1
47	QZ24047	螺钉	Screw 3/16-28 L=10	4
48	QZ24048	盖板	Window plate	1
49	QZ24049	垫片	Window plate packing	1
50	QZ24050	垫圈	Washer	1
51	QZ24051	波型垫圈	Waved washer	2
52	QZ24052	垫圈	Washer	1
53	QZ24053	螺钉	Screw 3/16-32 L=6.5	1
54	QZ24054	手柄	Knob	1
55	QZ24055	螺钉	Screw 3/16-28 L=14	1
56	QZ24056	弹簧垫圈	Spring washer 5.1x9.2x1.3	1
57	QZ24057	垫圈	Washer 5x10.5x1	1
58	QZ24058	电线组件	Resistance pack al asm.	1
59	QZ24059	电线组件	Resistance pack al asm.	1

17.2288N专用零件 (2)

Exclusive parts for 2288N(2)

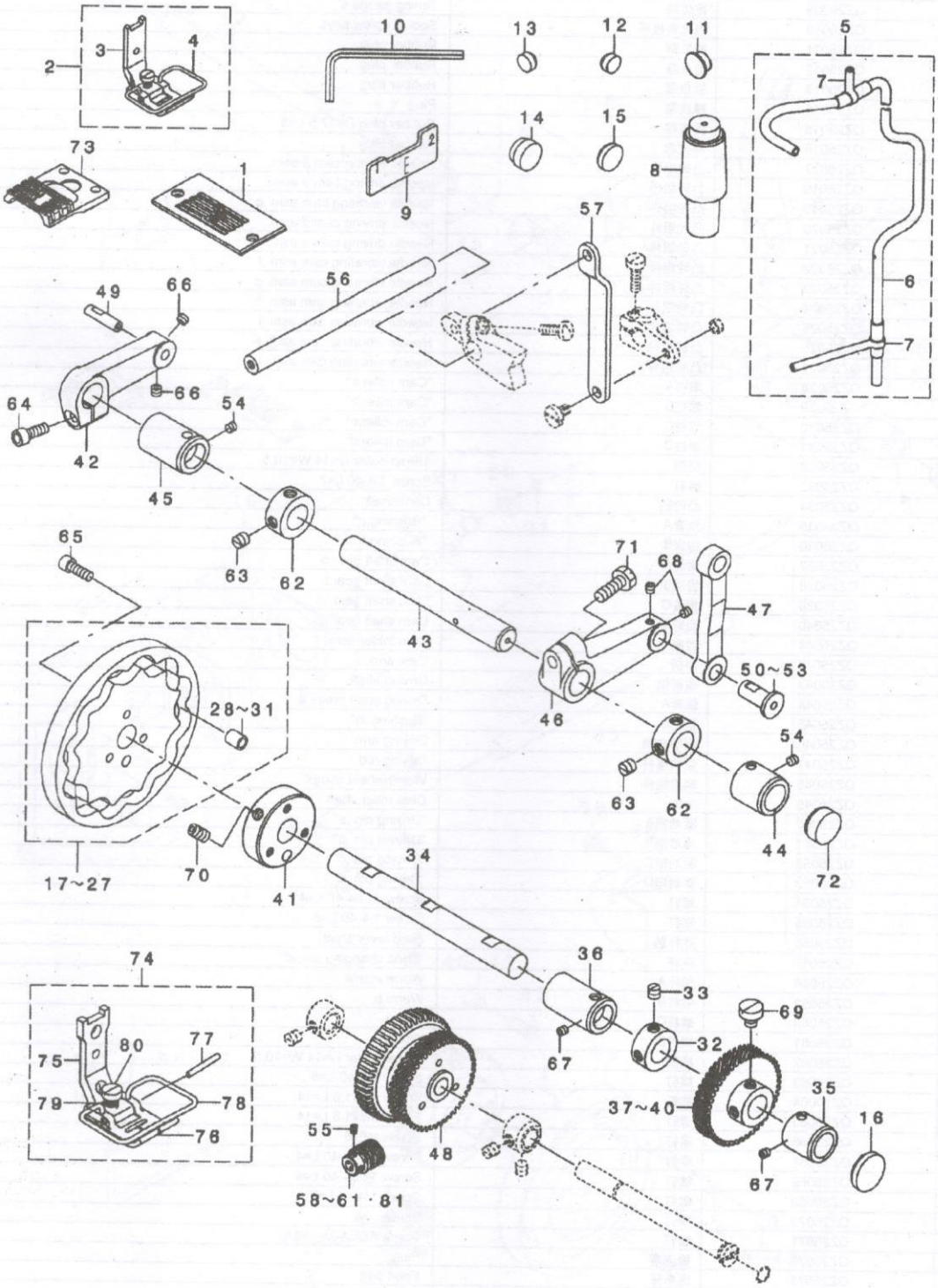

序号	零件代号	名 称	DESCRIPTIPN	数 量
1	QZ25001	针板	Needle plate	1
2	QZ25002	压脚组件	Presser asm.	1
3	QZ25003	压脚柄	Presser foot asm.	(1)
4	QZ25004	压脚防护罩	Safety cover	(1)
5	QZ25005	油管组件	Arm shaft oil pipe asm.	1
6	QZ25006	油管	Arm shaft oil pipe	(1)
7	QZ25007	油管接头	Rubber joint	(2)
8	QZ25008	机头支撑杆	Head support rod asm.	1
9	QZ25009	定位块	Timing gauge e	1
10	QZ25010	内六角扳手	Socket screw keys	1
11	QZ25011	橡皮塞	Rubber plug	1
12	QZ25012	橡皮塞	Rubber plug	3
13	QZ25013	橡皮塞	Rubber plug	2
14	QZ25014	橡皮塞	Plug	2
15	QZ25015	橡皮塞	Rubber plug D=17.5 L=5	1
16	QZ25016	橡皮塞	Rubber plug	1
17	QZ25017	凸轮组件	Needle driving cam a asm.	1
18	QZ25018	凸轮组件	Needle driving cam b asm.	1
19	QZ25019	凸轮组件	Needle vibrating cam asm .c	1
20	QZ25020	凸轮组件	Needle driving cam d asm.	1
21	QZ25021	凸轮组件	Needle driving cam e asm.	1
22	QZ25022	凸轮组件	Needle vibrating cam asm .f	1
23	QZ25023	凸轮组件	Needle vibrating cam asm .g	1
24	QZ25024	凸轮组件	Needle vibrating cam asm .h	1
25	QZ25025	凸轮组件	Needle vibrating cam asm .j	1
26	QZ25026	凸轮组件	Needle vibrating cam asm .k	1
27	QZ25027	凸轮组件	Needle vibrating cam asm .l	1
28	QZ25028	滚柱A	"Cam roller,a"	(1)
29	QZ25029	滚柱B	"Cam roller,b"	(1)
30	QZ25030	滚柱C	"Cam roller,c"	(1)
31	QZ25031	滚柱D	"Cam roller,d"	(1)
32	QZ25032	挡圈	Thrust collar D=14 W=10.5	1
33	QZ25033	螺钉	Screw 1/4-40 L=7	2
34	QZ25034	凸轮轴	Cam shaft	1
35	QZ25035	轴套A	"Bushing,a"	1
36	QZ25036	轴套B	"Bushing,b"	1
37	QZ25037	齿轮A	Cam shaft gear a	1
38	QZ25038	齿轮B	Cam shaft gear b	1
39	QZ25039	齿轮C	Cam shaft gear b	1
40	QZ25040	齿轮D	Cam shaft gear d	1
41	QZ25041	挡圈	Cam folder asm.	1
42	QZ25042	曲柄	Cam arm	1
43	QZ25043	曲柄轴	Driving shaft	1
44	QZ25044	轴套A	Driving shaft metal a	1
45	QZ25045	轴套B	"Bushing ,b"	1
46	QZ25046	驱动曲柄	Driving arm	1
47	QZ25047	驱动连杆	Driving rod	1
48	QZ25048	蜗轮组件	Worm wheel compl.	1
49	QZ25049	小轴	Cam roller shaft	1
50	QZ25050	驱动销A	"Driving pin ,a"	1
51	QZ25051	驱动销B	"Driving pin ,b"	1
52	QZ25052	驱动销C	"Driving pin ,c"	1
53	QZ25053	驱动销D	"Driving pin ,d"	1
54	QZ25054	螺钉	Screw 11/64-40 L=4	2
55	QZ25055	螺钉	Screw 1/4-40 L=6	4
56	QZ25056	连杆轴	Feed lever shaft	1
57	QZ25057	连杆	"Feed changing link,a"	1
58	QZ25058	蜗杆A	Worm asm.a	1
59	QZ25059	蜗杆B	Worm b	1
60	QZ25060	蜗杆C	Worm	1
61	QZ25061	蜗杆D	Worm	1
62	QZ25062	挡圈	Thrust collar D=14 W=10.5	2
63	QZ25063	螺钉	Screw 1/4-40 L=6	(4)
64	QZ25064	螺钉	Screw m5x1.8 L=14	1
65	QZ25065	螺钉	Screw m5x1.8 L=14	3
66	QZ25066	螺钉	Screw m5x6	2
67	QZ25067	螺钉	Screw 11/64-40 L=4	2
68	QZ25068	螺钉	Screw 11/64-40 L=4	2
69	QZ25069	螺钉	Screw 1/4-40 L=7	2
70	QZ25070	螺钉	Screw	2
71	QZ25071	螺钉	Screw 15/64-28 L=17	1
72	QZ25072	橡皮塞	Plug	1
73	QZ25073	送布牙	Feed dog	1
74	QZ25074	压脚组件	Presser foot asm.	1
75	QZ25075	压脚柄	Presser foot (upper)	(1)
76	QZ25076	压脚底板	Presser foot (lover)	(1)
77	QZ25077	压脚销	Presser pin	(1)
78	QZ25078	压脚防护罩	Safety cover	(1)
79	QZ25079	压脚弹簧	Spring	(1)
80	QZ25080	螺钉	Screw 9/64-40 L=7.5	(1)
81	QZ25081	蜗杆E	Worm E	1

18. 2284N(-7),2284C-7专用零件(1)

Exclusive parts for 2284N(-7),2284C(-7)(1)

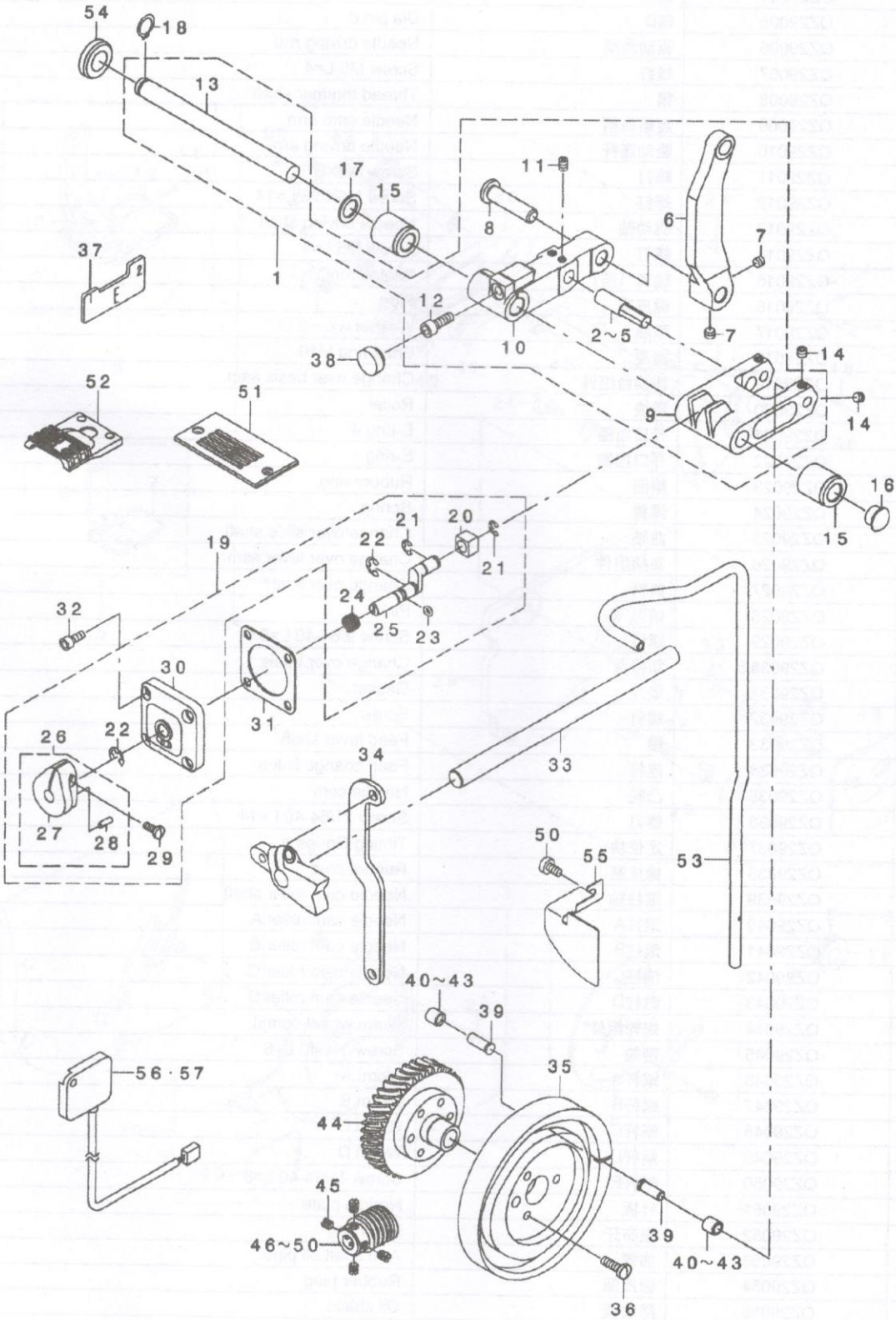

序号	零件代号	名 称	DESCRIPTIPN	数 量
1	QZ29001	针杆驱动曲柄组件	Needle driving arm asm.	1
2	QZ29002	销A	Dia pin a	(1)
3	QZ29003	销B	Dia pin b	(1)
4	QZ29004	销C	Dia pin c	(1)
5	QZ29005	销D	Dia pin d	(1)
6	QZ29006	驱动曲柄	Needle driving rod	(1)
7	QZ29007	螺钉	Screw M5 L=4	(2)
8	QZ29008	销	Thread trimmer shaft	(1)
9	QZ29009	连接曲柄	Needle cam arm	(1)
10	QZ29010	驱动连杆	Needle driving arm	(1)
11	QZ29011	螺钉	Screw M5X6	(2)
12	QZ29012	螺钉	Screw M5X0.8 L=14	(1)
13	QZ29013	驱动轴	Needle driving shaft	(1)
14	QZ29014	螺钉	Screw M5 L=4	4
15	QZ29015	轴套（前）	"Metal,front"	2
16	QZ29016	橡皮塞	Plug	1
17	QZ29017	垫圈	Washer	1
18	QZ29018	挡圈	Snap ring M10	1
19	QZ29019	切换台组件	Change over basis asm.	1
20	QZ29020	滑块	Roller	(1)
21	QZ29021	开口挡圈	E-ring 4	(2)
22	QZ29022	开口挡圈	E-ring	(2)
23	QZ29023	垫圈	Rubber ring	(1)
24	QZ29024	弹簧	Spring	(1)
25	QZ29025	曲轴	Change over slide shaft	(1)
26	QZ29026	曲柄组件	Change over lever asm.	(1)
27	QZ29027	曲柄	Change over lever	(1)
28	QZ29028	销	Pin	(1)
29	QZ29029	螺钉	Screw 9/64-40 L=8.5	(1)
30	QZ29030	切换台	Change over basis	(1)
31	QZ29031	垫片	Gasket	1
32	QZ29032	螺钉	Screw	4
33	QZ29033	轴	Feed lever shaft	1
34	QZ29034	连杆	Feed change link a	1
35	QZ29035	凸轮	Needle cam	1
36	QZ29036	螺钉	Screw 11/64-40 L=14	3
37	QZ29037	定位块	Timing Gauge e	1
38	QZ29038	橡皮塞	Rubber plug	1
39	QZ29039	滚柱轴	Needle cam roller shaft	2
40	QZ29040	滚柱A	Needle cam roller A	2
41	QZ29041	滚柱B	Needle cam roller B	2
42	QZ29042	滚柱C	Needle cam roller C	2
43	QZ29043	滚柱D	Needle cam roller D	2
44	QZ29044	蜗轮组件	Worm wheel compl.	1
45	QZ29045	带轮	Screw 1/4-40 L=6	4
46	QZ29046	蜗杆A	Worm A	1
47	QZ29047	蜗杆B	Worm B	1
48	QZ29048	蜗杆C	Worm C	1
49	QZ29049	蜗杆D	Worm D	1
50	QZ29050	蜗杆E	Screw 11/64-40 L=8	1
51	QZ29051	针板	Needle plate	1
52	QZ29052	送布牙	Feed dog	1
53	QZ29053	油管	Arm shaft oil pipe	1
54	QZ29054	橡皮圈	Rubber plug	1
55	QZ29055	防油板	Oil shield	1
56	QZ29056	电线组件	Resistance pack al asm.	1
57	QZ29057	电线组件	Resistance pack al asm.	1

19.2284N(-7),2284C-7专用零件(2)

Exclusive parts for 2284N(-7),2284C(-7)(2)

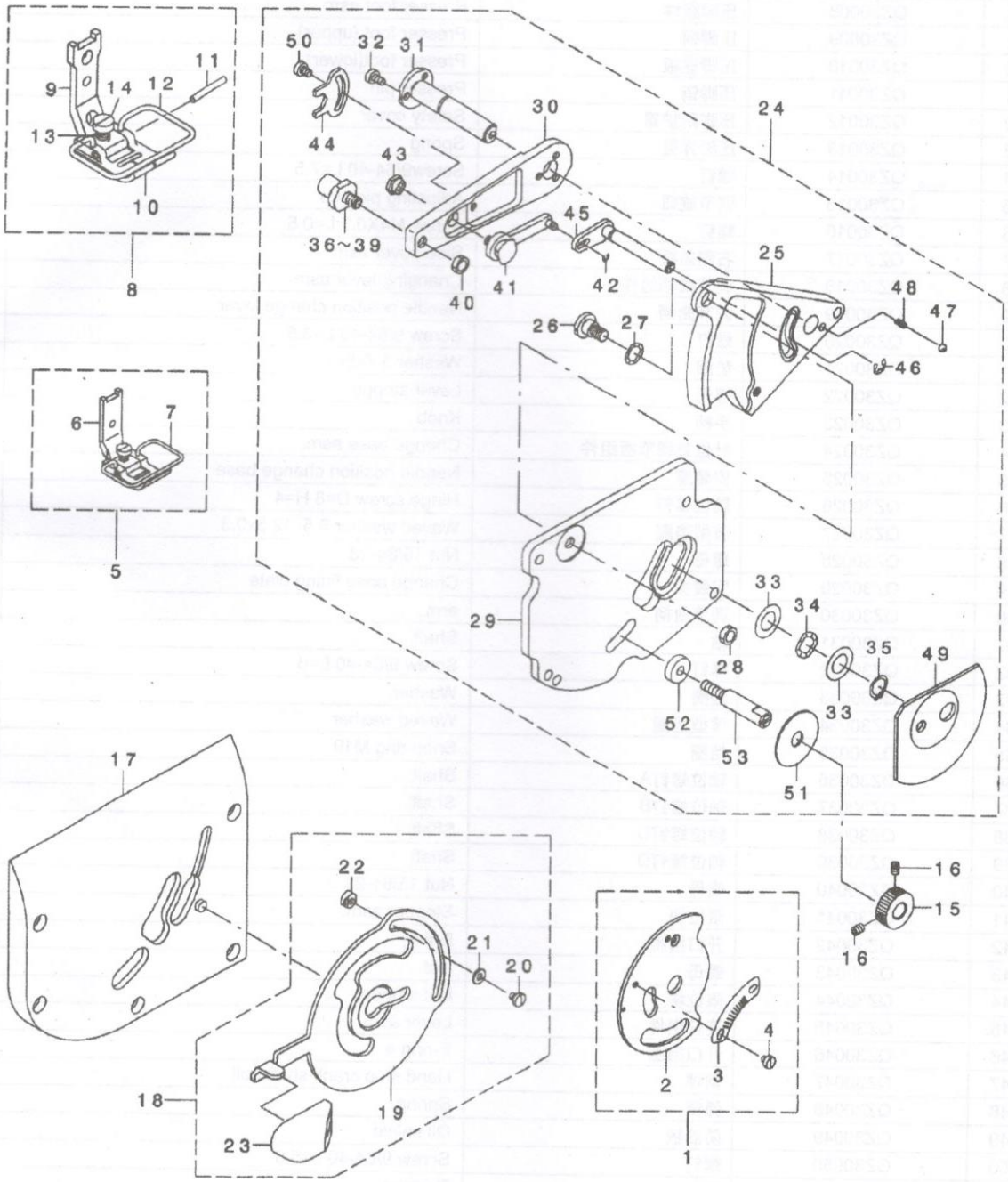

序号	零件代号	名 称	DESCRIPTIPN	数 量
1	QZ30001	针幅调节板组件	Swing wide graduation asm.	1
2	QZ30002	针幅调节板	Fitting plate compl.	(1)
3	QZ30003	刻度盘	Swing wide graduation	(1)
4	QZ30004	螺钉	Screw 1/8-44 L=2.5	(2)
5	QZ30005	压脚组件	Presser asm.	1
6	QZ30006	压脚柄	Presser foot asm.	(1)
7	QZ30007	压脚防护罩	Safety cover	(1)
8	QZ30008	压脚组件	Presser foot asm.	1
9	QZ30009	压脚柄	Presser foot (upper)	(1)
10	QZ30010	压脚底板	Presser foot(lower)	(1)
11	QZ30011	压脚销	Presser pin	(1)
12	QZ30012	压脚防护罩	Safety cover	(1)
13	QZ30013	压脚弹簧	Spring	(1)
14	QZ30014	螺钉	Screw9/64-40 L=7.5	(1)
15	QZ30015	调节旋钮	Adjusting pick-up	1
16	QZ30016	螺钉	Screw M4X0.7 L=0.5	2
17	QZ30017	右侧盖板	Side cover asm.	1
18	QZ30018	调节曲柄组件	Changing lever asm.	1
19	QZ30019	调节曲柄	Needle position change lever	(1)
20	QZ30020	螺钉	Screw 9/64-40 L=3.5	(2)
21	QZ30021	垫圈	Washer 3.7x8x1	(2)
22	QZ30022	螺母	Lever stopper	(2)
23	QZ30023	手柄	Knob	(1)
24	QZ30024	针位置调节板组件	Change base asm.	1
25	QZ30025	安装座	Needle position change base	(1)
26	QZ30026	轴位螺钉	Hinge screw D=8 H=4	(1)
27	QZ30027	波型垫圈	Waved washer 8.5x12.5x0.3	(3)
28	QZ30028	螺母	Nut 15/64-28	(1)
29	QZ30029	安装板	Change base fitting plate	(1)
30	QZ30030	调节曲柄	arm	(1)
31	QZ30031	轴	Shaft	(1)
32	QZ30032	螺钉	Screw 9/64-40 L=6	(3)
33	QZ30033	垫圈	Washer	(2)
34	QZ30034	波型垫圈	Waved washer	(1)
35	QZ30035	挡圈	Snap ring M10	(1)
36	QZ30036	轴位螺钉A	Shaft	(1)
37	QZ30037	轴位螺钉B	Shaft	(1)
38	QZ30038	轴位螺钉C	Shaft	(1)
39	QZ30039	轴位螺钉D	Shaft	(1)
40	QZ30040	螺母	Nut 15/64-28	(1)
41	QZ30041	限位块	Stopper asm.	(1)
42	QZ30042	开口挡圈	E-ring	1)
43	QZ30043	螺母	Nut	(1)
44	QZ30044	限位块	Nut stopper	(1)
45	QZ30045	连杆组件	Lever asm.	(1)
46	QZ30046	开口挡圈	E-ring 4	(1)
47	QZ30047	钢球	Hand stop crank shaft ball	(1)
48	QZ30048	弹簧	Spring	(1)
49	QZ30049	防油板	Oil shield	(1)
50	QZ30050	螺钉	Screw 9/64-40 L=5.0	(1)
51	QZ30051	垫片	Packing	(1)
52	QZ30052	滚柱	Roller	(1)
53	QZ30053	调节螺钉	Adjusting pick-up screw	(1)